ERDC TR-07-5

Engineer Research and Development Center

US Army Corps of Engineers®
Engineer Research and Development Center

Strategic Environmental Research and Development Program

Fate and Transport of Tungsten at Camp Edwards Small Arms Ranges

Jay L. Clausen, Susan Taylor, Steven L. Larson, Anthony J. Bednar, Michael Ketterer, Chris S. Griggs, Dennis J. Lambert, Alan D. Hewitt, Charles A. Ramsey, Susan R. Bigl, Ronald N. Bailey, and Nancy M. Perron

August 2007

Approved for public release; distribution is unlimited.

COVER: Small arms qualification training at Camp Edwards, Massachusetts.

Strategic Environmental Research and Development Program

ERDC TR-07-5
August 2007

Fate and Transport of Tungsten at Camp Edwards Small Arms Ranges

Jay L. Clausen, Susan Taylor, Dennis J. Lambert, Alan D. Hewitt, Susan R. Bigl, Ronald N. Bailey, and Nancy M. Perron

Cold Regions Research and Engineering Laboratory
US Army Engineer Research and Development Center
72 Lyme Road
Hanover, New Hampshire 03755-1290

Steven L. Larson, Anthony J. Bednar, and Chris S. Griggs

Environmental Laboratory
US Army Engineer Research and Development Center
3909 Halls Ferry Road
Vicksburg, Mississippi 39180-6199

Michael Ketterer

Northern Arizona University
3828 North Steves Boulevard
Flagstaff, Arizona 86004

Charles A. Ramsey

EnviroStat, Inc.
PO Box 636
Fort Collins, Colorado 80522

Final report

Approved for public release; distribution is unlimited.

Prepared for Strategic Environmental Research and Development Program
Arlington, Virginia 22203

Abstract: Camp Edwards, Massachusetts, is the first of three military installations studied to assess the distribution of tungsten at small arms ranges. The study focused on three ranges at Camp Edwards. Tungsten was present in surface soils up to 2,080 mg/kg. Highest observed concentrations occurred at the berm face and decreased away from the berm in the following order: trough, target, range floor, and firing point. Tungsten concentration in surface soils at the firing point was similar to background levels, i.e., 1.5 mg/kg. Tungsten levels in subsurface soils decreased with depth with an order of magnitude or more decrease in concentration within the top 25 cm. However, samples collected at 150 cm still had tungsten levels above background. Tension lysimeters installed in the berm area had dissolved tungsten up to 400 mg/L. The 24 lysimeters did not exhibit consistent tungsten concentration trends and no trend was evident with depth, but concentration levels on the range were significantly elevated compared to background. Mean tungsten concentration for lysimeters installed in background locations was 0.09 mg/L and ranged from 0.011 to 0.169 mg/L. One of three monitoring wells sampled had tungsten with concentrations varying from 0.0044 to 0.56.

DISCLAIMER: The contents of this report are not to be used for advertising, publication, or promotional purposes. Citation of trade names does not constitute an official endorsement or approval of the use of such commercial products. All product names and trademarks cited are the property of their respective owners. The findings of this report are not to be construed as an official Department of the Army position unless so designated by other authorized documents.

DESTROY THIS REPORT WHEN NO LONGER NEEDED. DO NOT RETURN IT TO THE ORIGINATOR.

Contents

FIGURES AND TABLES v

NOMENCLATURE vii

PREFACE ix

1 INTRODUCTION 1

2 BACKGROUND 2

Tungsten 2
Tungsten Projectile 3
Camp Edwards 4

3 OBJECTIVES 5

4 CONCEPTUAL MODEL 6

5 METHODS 9

Field methods 9
Site Selection 9
Sample Collection 13
Sample Preparation 20
Sample Analysis 21
Soil 21
Water 22
Other Methods 23

6 QUALITY ASSURANCE/QUALITY CONTROL 25

Standards 25
Soil 25
Water 29

7 RESULTS 31

Field Measurements 31
Soil 31
Water 40
Laboratory Tests 49
Digestion Techniques 49
Characteristics of Tungsten and Camp Edwards Soil 49
Solubility Tests 49

8 DISCUSSION **53**
Distribution of Tungsten 53
Fate and Transport of Tungsten 55
Mass Balance 58
X-Ray Fluorescence Versus Inductively Coupled Plasma 59

9 CONCLUSIONS **60**

10 RECOMMENDATIONS **61**

11 REFERENCES **62**

Appendix A: Lysimeter Installation and Sampling Details **64**

Appendix B: X-Ray Fluorescence (XRF) **71**

Appendix C: X-Ray Diffraction (XRD) **78**

Appendix D: Scanning Electron Microscopy (SEM) **80**

Appendix E: Soil Metal Results **86**

Appendix F: Other Data **90**

Appendix G: Laboratory Tests **91**

Report Documentation Page **109**

FIGURES AND TABLES

Figures

Figure 1. Schematic and photograph of 5.56-mm tungsten/nylon projectile 3
Figure 2. Tungsten/nylon core 4
Figure 3. Schematic of a typical small arms firing range 6
Figure 4. Example of a bullet pocket located behind a target 7
Figure 5. Small arms firing ranges at Camp Edwards 11
Figure 6. Bravo "B" Range at Camp Edwards 12
Figure 7. Charlie "C" Range at Camp Edwards 12
Figure 8. India "I" Range at Camp Edwards 13
Figure 9. Decision units for Bravo Range and number of surface soil samples collected 14
Figure 10. Decision units for Charlie Range and number of surface soil samples collected 14
Figure 11. Decision units for India Range and number of surface soil samples collected 15
Figure 12. Subsurface soil sample corer 16
Figure 13. Bravo Range surface soil tungsten concentrations by decision units 34
Figure 14. Bravo Range subsurface soil tungsten concentrations 35
Figure 15. Charlie Range surface soil tungsten concentrations by decision units 37
Figure 16. Charlie Range subsurface soil tungsten concentrations 37
Figure 17. India Range surface soil tungsten concentrations by decision units 39
Figure 18. India Range subsurface soil tungsten concentrations 39
Figure 19. Tungsten pore-water trends for Bravo Range lysimeters 43
Figure 20. Lysimeter tip depth versus mean tungsten concentrations 43
Figure 21. Location of monitoring wells sampled for the tungsten fate-and-transport study 45
Figure 22. Desorption batch experiment assessing the relationship between tungsten soil concentrations and water tungsten concentrations 51
Figure 23. Tungsten pore-water trends for Charlie Range lysimeters 54
Figure 24. Tungsten pore-water trends for India Range lysimeters 55

Tables

Table 1. Number of tungsten/nylon rounds fired at Camp Edwards and total mass of tungsten by small arms firing range per training year 10
Table 2. Number of surface and subsurface samples collected at B, C, and I Ranges at Camp Edwards 16
Table 3. Quality control elements, frequency of implementation, and acceptance criteria followed for analysis of tungsten and heavy metals in soils and waters 26
Table 4. Quality control samples 27
Table 5. Bravo Range surface soil samples 33

Table 6. Charlie Range surface soil samples 36
Table 7. India Range surface soil samples 38
Table 8. Lysimeter tungsten results 42
Table 9. Groundwater tungsten results 48
Table 10. Concentration of tungsten in water dripped onto tungsten/nylon bullet 52

NOMENCLATURE

AEC	US Army Environmental Center
ARDEC	US Army Research, Development, and Engineering Center
CCB	Continuing calibration blank
CCV	Continuing calibration verification
CRREL	Cold Regions Research and Engineering Laboratory
DO	Dissolved oxygen
EDAX	Energy-dispersive X-ray microanalysis system
EL	Environmental Laboratory
EPA	US Environmental Protection Agency
ERDC	US Army Corps of Engineers, Engineer Research and Development Center
ICB	Initial calibration blank
ICP/AES	Inductively coupled plasma/atomic emission spectrometer
ICP/MS	Inductively coupled plasma/mass spectrometer
ICS	Inter-element check standards
ICV	Initial calibration verification
K_d	Partitioning coefficient
LCS	Laboratory control sample
MDL	Method detection limit

MMR	Massachusetts Military Reservation
MOPS	3-(N-Morpholino)-propanesulfonic acid
MSA	Method of standard additions
MSD	Matrix spike duplicate
NIST	National Institute of Standards and Tests
ORP	Oxidation-reduction potential
PQL	Practical quantitation limit
PSD	Post-serial dilution
PVC	Polyvinyl chloride
QA/QC	Quality assurance/quality control
RPD	Relative percent difference
RSD	Relative Standard Deviation
SD	Serial dilution
SEM	Scanning electron microscope
TCLP	Toxicity characteristic leach procedure
TOC	Total organic carbon
XRD	X-ray diffraction
XRF	X-ray fluorescence

PREFACE

This report was prepared by Jay L. Clausen and Susan Taylor, Biogeochemical Sciences Branch (BSB), US Army Engineer Research and Development Center (ERDC), Cold Regions Research and Engineering Laboratory (CRREL), Hanover, New Hampshire; Steven L. Larson and Anthony J. Bednar, ERDC Environmental Laboratory (EL), Vicksburg, Mississippi; Michael Ketterer, Northern Arizona University, Flagstaff, Arizona; Chris S. Griggs, EL; Dennis J. Lambert, Engineering Resources Branch, CRREL; Alan D. Hewitt, BSB, CRREL; Charles A. Ramsey, EnviroStat, Inc., Fort Collins, Colorado; and by Susan R. Bigl, Ronald N. Bailey, and Nancy M. Perron, BSB, CRREL.

The US Army Environmental Center provided funding for this work.

Marianne E. Walsh, BSB, CRREL, and Dr. Clarence L. Grant, University of New Hampshire Emeritus, provided technical reviews.

This report was prepared under the general supervision of Terrence M. Sobecki, Branch Chief, ESB, CRREL; Dr. Lance D. Hansen, Deputy Director, CRREL; and Dr. Robert E. Davis, Director, CRREL.

At the time this work was performed, Colonel Richard B. Jenkins was Commander and Executive Director of ERDC. Dr. James R. Houston was Director.

1 INTRODUCTION

The US Army through the Green Ammunition Program at the Army Research, Development, and Engineering Center (ARDEC) developed a 5.56-mm projectile with a tungsten core to replace the lead core in the mid 1990s as an environmentally benign replacement for the lead/antimony projectile. Tungsten metal selected as a lead substitute was thought to be insoluble in water and non-toxic. Because of cost considerations, the Army decided to focus on the production of tungsten/nylon. Production consisted of 85 million rounds of the tungsten/nylon cores to replace the M855 lead-based projectile. Use of the tungsten/nylon projectile began in 1999 for training, and in early 2003, recognition of flight instability issues occurred. Consequently, in June 2003, the Army halted tungsten/nylon projectile production. At present, the tungsten/nylon is not being produced, although the projectile has been redesigned and production is ready to resume.

Recent studies suggest material used in the Army's tungsten/nylon projectiles dissolves readily in water and is mobile under some field conditions. Unfortunately, little is known about the properties of tungsten at firing ranges or in other environments. Therefore, the US Army Environmental Center (USAEC) funded the US Army Corps of Engineers, Engineer Research and Development Center (ERDC), to conduct a study assessing the fate-and-transport properties of tungsten. Camp Edwards at the Massachusetts Military Reservation (MMR) was chosen as the first study site because tungsten/nylon projectiles have been fired at 12 small arms ranges since October 1999 and detailed records are available for the number fired per range.

2 BACKGROUND

Tungsten

Ferrotungsten, the chief alloy of tungsten, has a melting range of 1,600 to 2,700 °C, which is the highest melting point of all metals. Tungsten's atomic number is 74 and it is located with the transition metals on the periodic table of elements. The metal is silvery white in appearance and has a molecular weight of 183.85 g and density of 19.35 g/cm^3. Tungsten metal and its complexes have been reported in the literature to be insoluble as recently as 2001. Tungsten is found mainly in the +6 oxidation state (i.e., tungstate), sometimes in the +4 state in sulfides, and rarely in the +2, +3, and +5 states. The many multiple valence states possible make tungsten chemistry extremely complex. Also, polymerization of tungstate anions in mild acidic solutions occurs, resulting in the formation of polytungstates, with an increasing propensity of occurrence at lower pHs. The presence of other ions can influence the polymerization reactions and result in the formation of heteropolytungstates.

Tungsten concentrations in natural waters range from < 0.3 µg/L in surface waters to 15 to 300 µg/L in hot springs (Groen 1999). The aqueous species present, e.g., WO_4^{2-}, HWO_4^-, or H_2WO_4, depend on pH. Porewater samples collected from the tailings of a tungsten mine reached up to 7 mg/L. The water had a high pH (8.7 to 10.7), and the tungsten was expected to be in the form of tungstate (Petrunic and Al 2005). The adsorption of the aqueous species is also pH-dependent. Gustafsson (2003) found that tungstate adsorbs to ferrihydrite in a way similar to molybdate and arsenate and that it competes with phosphate.

Historically, tungsten metal was thought to be insoluble and have little or no mobility (Hartung 1991, Lassner et al. 1996, Langard 2001). Therefore, the Army selected tungsten as a possible replacement for lead in the 5.56-mm projectile. Recent studies suggest that the tungsten powder used in the Army's tungsten/nylon projectiles forms oxide coatings that dissolve in water and this metal oxide may be mobile under some environmental conditions (Dermatas et al. 2004). These and other findings have challenged assumptions regarding the fate and transport of tungsten.

Tungsten Projectile

Each of the three versions of the 5.56-mm projectiles, DODIC AA44, AA45, and AA48, contain a compressed powder of tungsten/nylon with a mass of 2.07 g (2.01 g tungsten and 0.06 g nylon) (MIDAS 2005) (Fig. 1 and 2). The tungsten powder is composed of 5- to 20-µm grains. Other projectile metals come from a copper, lead, and zinc alloy used in the jacket, cup primer, and case. For copper, lead, and zinc, the mass is 5.58, 0.015, and 2.01 g per bullet, respectively. The penetrator is made of steel (Fig. 1 and 2).

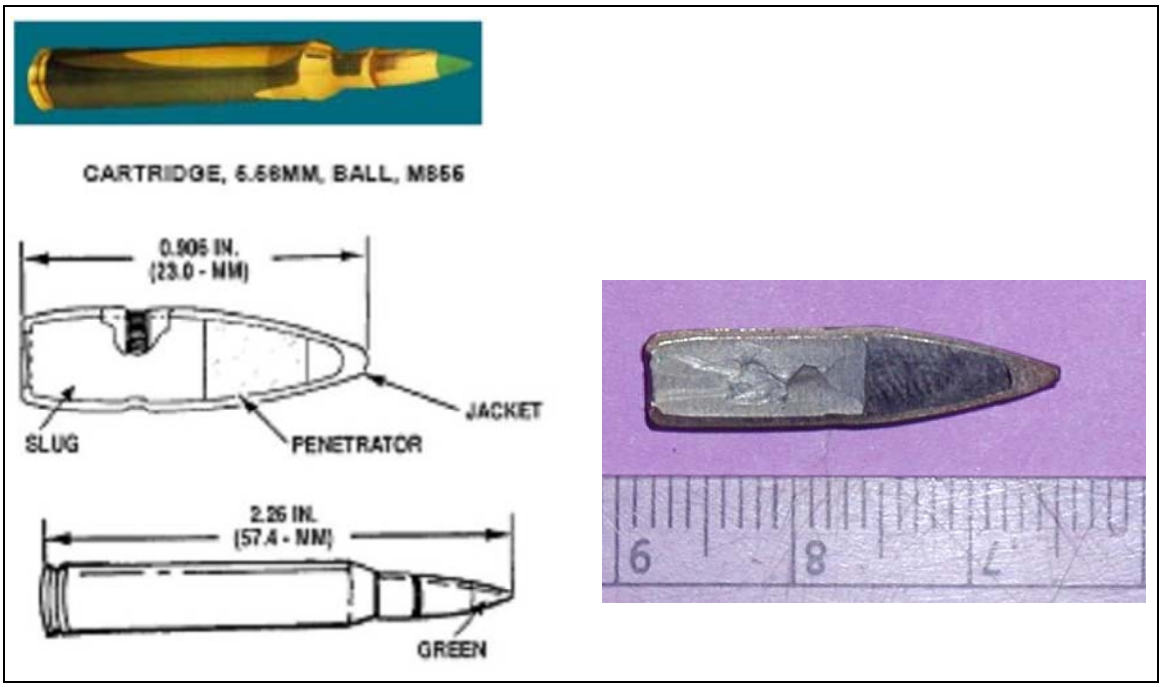

Figure 1. Schematic and photograph of 5.56-mm tungsten/nylon projectile.

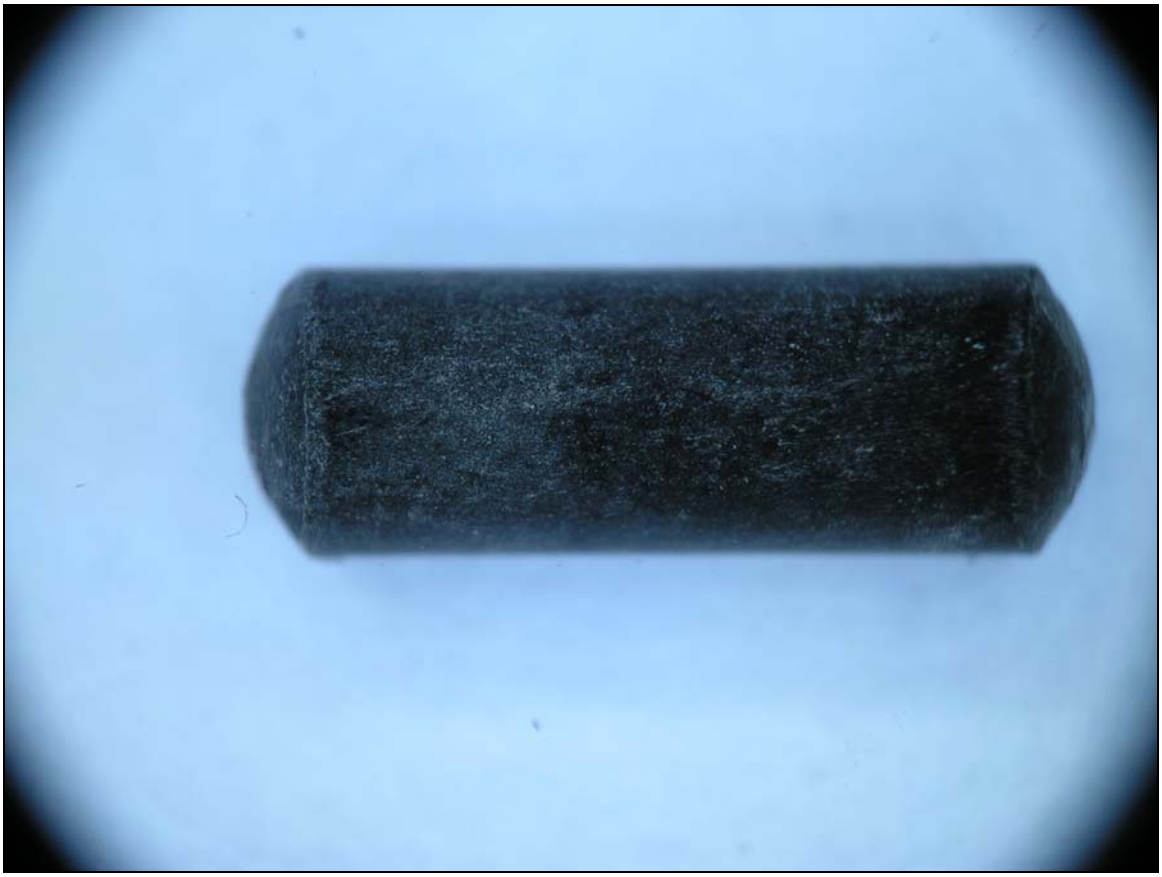

Figure 2. Tungsten/nylon core.

Camp Edwards

In 1997, the US Environmental Protection Agency (EPA) issued Administrative Order SDWA I-97-1030 (AO2), which resulted in the cessation of small arms training with lead projectiles. The EPA order also required remediation of the small arms ranges. In 1999, soil was removed from these berms and the large lead fragments were separated from the soil. The soil was then treated with Maectite, which bound up any dissolved lead into a less soluble lead phosphate complex. Tungsten projectiles were used at Camp Edwards until February 2006, when the Governor of Massachusetts placed a moratorium on training with this projectile because of concerns about tungsten's mobility in the environment and potential impact on the sole source aquifer at Cape Cod.

3 OBJECTIVES

The objective of the study at Camp Edwards was to sample three small arms ranges in order to

1. Assess the form and mobility of tungsten on small arms ranges, and

2. Characterize the distribution and chemical form of tungsten in the soil.

To achieve these objectives the concentration of tungsten was determined in range soils and water (soil pore-water and groundwater).

Project team members for the tungsten fate-and-transport study at Camp Edwards are listed below. Other individuals assisting in the project include staff from the ERDC-Cold Regions Research and Engineering Laboratory (CRREL), ERDC-Environmental Laboratory (EL), and Dr. M. Ketterer, Northern Arizona University.

- Technical Representative and Program Manager: Ms. K. Watts (AEC)

- Technical Project Manager: Dr. B. Packer (AEC)

- Principal Investigator: Mr. J. Clausen (ERDC-CRREL)

- Co-Principal Investigator: Dr. S. Larson (ERDC-EL)

- Co-Principal Investigator: Dr. A. Bednar (ERDC-EL)

- Co-Principal Investigator: Mr. A. Hewitt (ERDC-CRREL)

- Co-Principal Investigator: Dr. Susan Taylor (ERDC-CRREL)

4 CONCEPTUAL MODEL

Firing a tungsten/nylon bullet introduces tungsten and other projectile-related metals (e.g., copper) into the environment. Most projectiles have stable flight paths and impact the berm behind the targets, forming depressions called bullet pockets (Fig. 3). Soldiers, however, have noticed erratic flight paths (tumbling or other non-ideal behavior) from some lots or from weapons with barrels near the end of their service life. Tumbling could break the projectiles apart and release tungsten on the range floor. Projectiles could also miss the targets, be slightly deflected by the targets, bounce off the berm face, or miss the impact berm entirely. Most berms, including those at Camp Edwards, are made of sandy soil derived from the installation. Two processes that stop the projectile are displacement of soil and fragmentation of the projectiles. In sandy soils, displacement of soil particles limits lead projectile penetration to a foot or less into the berm. Hard-packed berm soils, surficial lead buildup, or the presence of rocks also may cause tungsten projectiles to fragment upon impact. Copper deposition may occur near the firing point as a result of scouring of projectiles in the weapon barrel (Fig. 4).

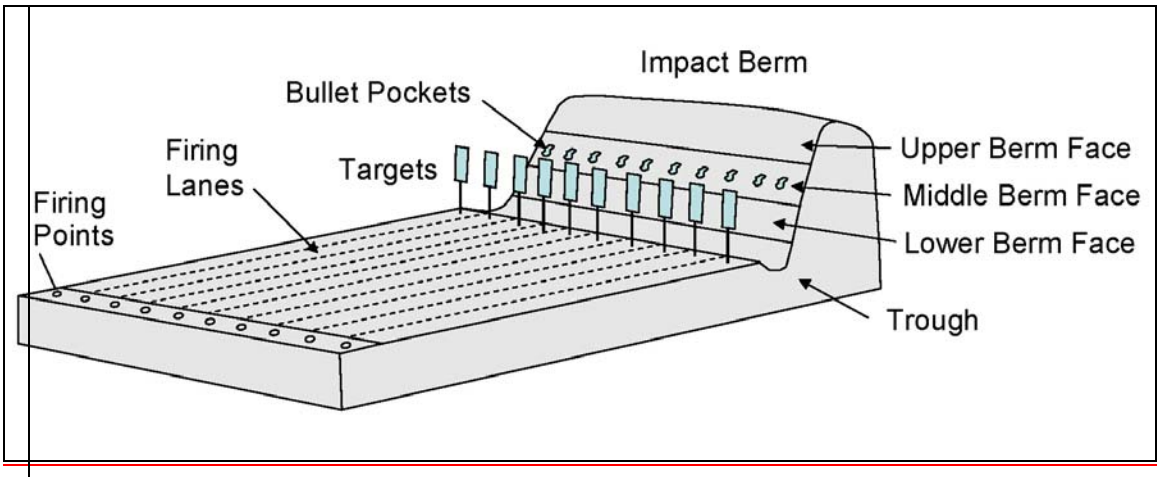

Figure 3. Schematic of a typical small arms firing range.

Figure 4. Example of a bullet pocket located behind a target.

In contrast with lead projectiles, tungsten metal particles from the tungsten/nylon 5.56-mm round are bound in a nylon matrix and have a tendency to fragment upon impact with any soil type. Consequently, the working hypothesis is that tungsten/nylon rounds may be found intact or as large pieces adhering to the deformed bullet jacket, or as tungsten particles ranging from 5 to 20 μm. We found no visible particles of the tungsten/nylon core separated from the projectile. Pieces of the copper-alloy jacket and the steel penetrator were often found on the surface within and between the bullet pockets. Because of the small particle size and the vibration of the soil by subsequent bullet impacts, it is thought tungsten particles may work their way downward into the soil. Also, because bullet pockets are eroded by precipitation, it is possible erosion has moved tungsten into the troughs (low areas in front of berms).

The extent to which tungsten metal particles have oxidized or dissolved to form tungsten complexes is not known. If weathered and corroded, metallic tungsten can react with oxygen and water to form tungsten oxides and

complexes, possibly even before firing. Once deposited into the environment, weathering in the presence of water and oxygen results in solubilization. Reactions of the tungsten oxide within the soil likely result in the formation of the tungstate anion $(WO_4)^{2-}$, although formation of polytungstates and colloidal nanoparticles cannot be ruled out. Infiltrating precipitation can potentially transport tungstate species and other metal species. Studies by Petrunic and Al (2005) and Seiler et al. (2005) have demonstrated the geochemical mobility of tungsten. Knowledge of the kinetics and thermodynamics of tungsten phase transformations and associations to assess the extent to which these processes occur is needed; unfortunately, little research to date has examined these processes in natural systems (Groen 1999, Gustafsson 2003, Dermatas et al. 2004, Petrunic and Al 2005).

5 METHODS

Field methods

Site Selection

Camp Edwards was selected as the first study site because it has been used the longest and the number of tungsten projectiles fired was recorded for each range. The site has a poorly developed soil consisting of coarse sand and gravel with a very low organic matter content. The pH and the cation exchange capacity of the soil are low (AMEC 2001a). The climate is temperate and receives on average 110 cm of rainfall per year, of which 40 percent reaches groundwater (AMEC 2001b). The rate of infiltrating precipitation is estimated to take between several months to two years to reach the groundwater, which is at a depth of 40 m below the surface in the area of interest (AMEC 2001). The groundwater flow velocity near the small arms firing ranges is approximately 0.3 m/day (AMEC 2001).

There are 20 small arms firing ranges at Camp Edwards, and tungsten/nylon projectiles have been fired at 12 of these (Table 1 and Fig. 5). The greatest numbers of tungsten projectiles were fired on B, C, KD, SE, SW, G, and I Ranges. Given the similarity of the soil and meteorological conditions across the Camp Edwards installation, the major factor in selecting B (Fig. 6), C (Fig. 7), and I Ranges (Fig. 8) was the number of tungsten rounds fired and the presence of a berm behind the targets. From the number of rounds fired at each range, we calculated the mass of tungsten that could be present at 664 kg for B Range, 460 kg for C Range, and 69 kg for I Range (Table 1).

Table 1. Number of tungsten/nylon rounds fired at Camp Edwards and total mass of tungsten by small arms firing range per training year.

Range	Rounds fired							Total mass (kg)			
	TY 2000	TY 2001	TY 2002	TY 2003	TY 2004	TY 2005	Total	W	Cu	Pb	Zn
B	25,080	23,990	61,038	110,657	66,916	42,496	330,177	**664**	1,842	5.1	665
C	36,143	25,897	27,610	69,710	40,510	28,599	228,469	**460**	1,274	3.5	460
G	2,250	3,360	23,360	13,520	0	0	42,490	**85**	237	0.7	86
H	3,800	7,690	11,085	12,960	3,700	1,800	41,035	**83**	229	0.6	83
I	0	6,392	16,800	8,960	2,200	0	34,352	**69**	192	0.5	69
IBC	0	1,000	22,160	18,685	0	0	41,845	**84**	233	0.6	84
J	1,100	2,400	7,520	8,876	4,064	0	23,960	**48**	134	0.4	48
KD	0	0	6,720	12,655	37,763	11,672	68,810	**138**	384	1.1	139
K	1,100	3,488	12,240	840	2,320	8,280	28,268	**57**	158	0.4	57
SE	27,227	600	12,754	10,800	8,480	22,204	82,065	**165**	458	1.3	165
SW	0	2,600	13,554	9,200	27,260	0	52,614	**106**	293	0.8	106
T	0	3,200	8,400	10,057	6,370	9,280	37,307	**75**	208	0.6	75
Totals	**96,700**	**80,617**	**223241**	**286,920**	**199,583**	**124,331**	**101,1392**	**2,035**	**5,642**	**15.6**	**2,038**

TY Training Year
W Tungsten
Cu Copper
Pb Lead
Zn Zinc

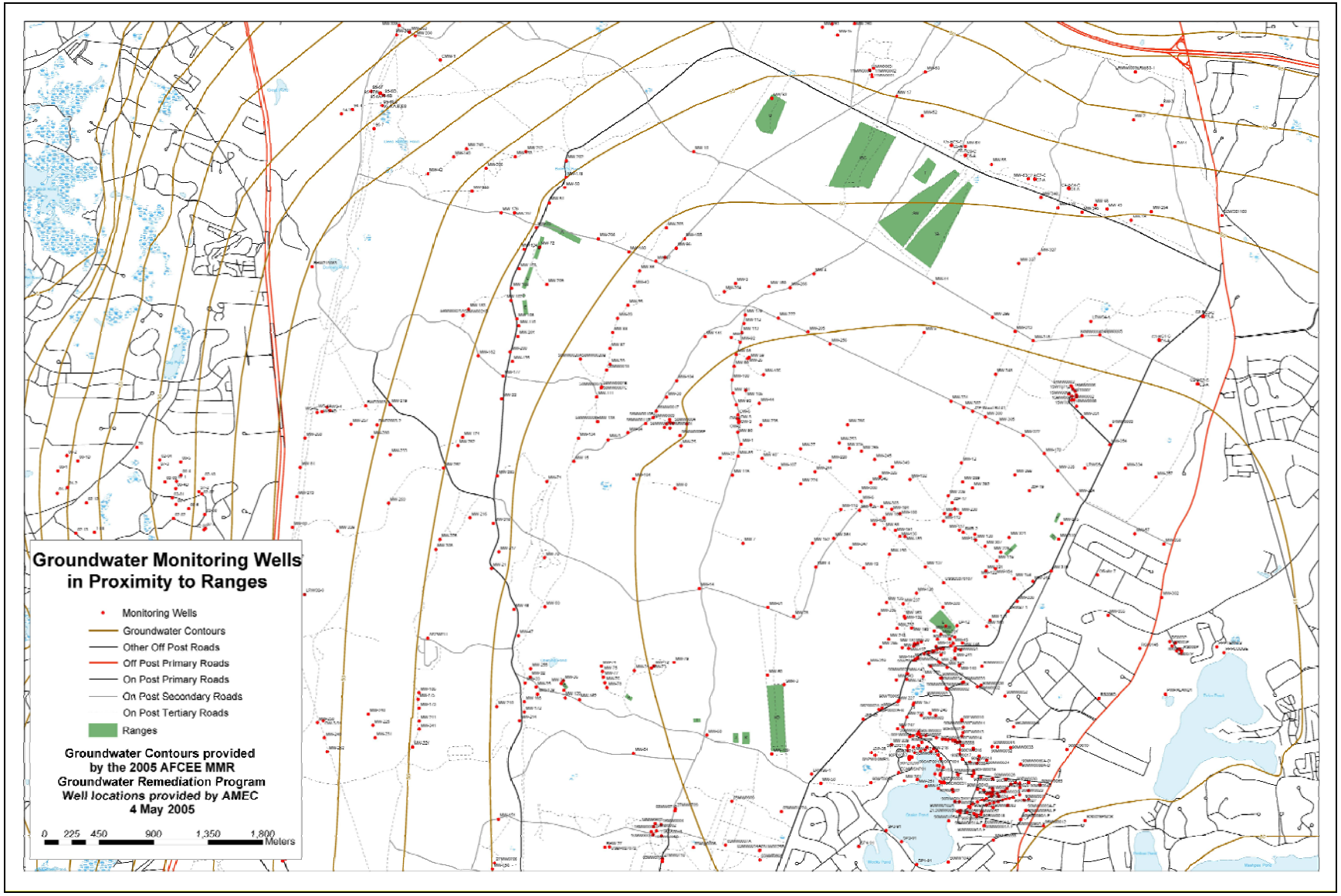

Figure 5. Small arms firing ranges at Camp Edwards.

Figure 6. Bravo "B" Range at Camp Edwards.

Figure 7. Charlie "C" Range at Camp Edwards.

Figure 8. India "I" Range at Camp Edwards.

Sample Collection

At B, C, and I Ranges, surface soil samples were collected from the firing point, range floor, target area, trough, and berm decision units (Fig. 9, 10, 11). Subsurface soil samples and lysimeter water samples were collected from the impact berm and trough at each range. Groundwater samples were also collected from existing monitoring wells. Because of the high soil infiltration capacity at Camp Edwards, there is no storm water runoff or surface water near the ranges studied. Bravo Range was sampled first. On-site X-ray fluorescence (XRF) measurements of B Range soils were used to optimize the sampling design at C and I Ranges.

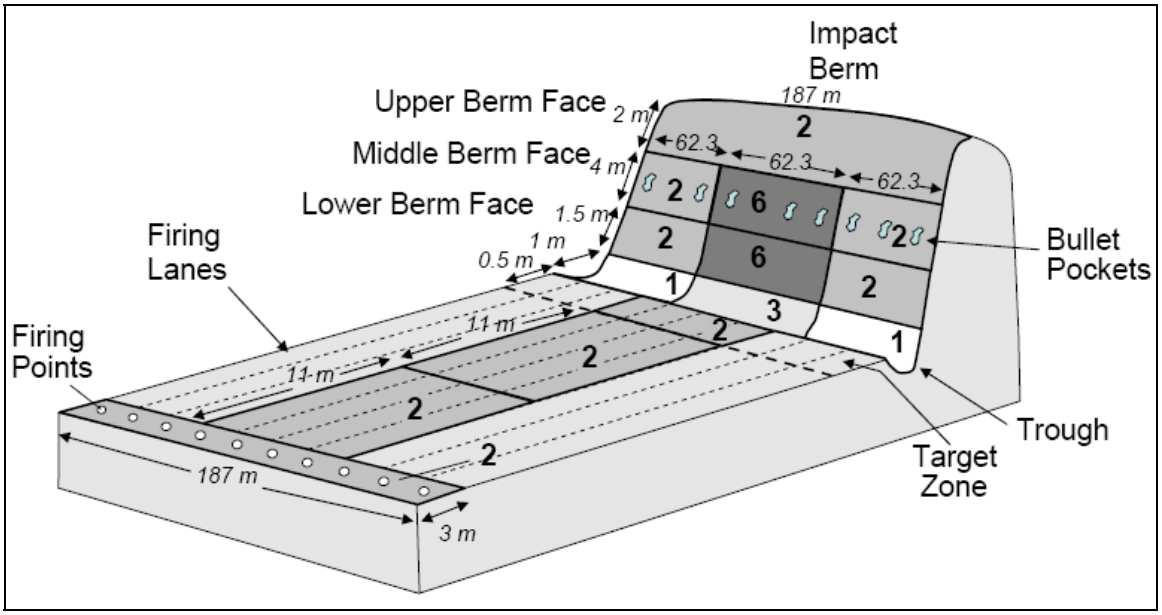

Figure 9. Decision units for Bravo Range and number of surface soil samples collected.

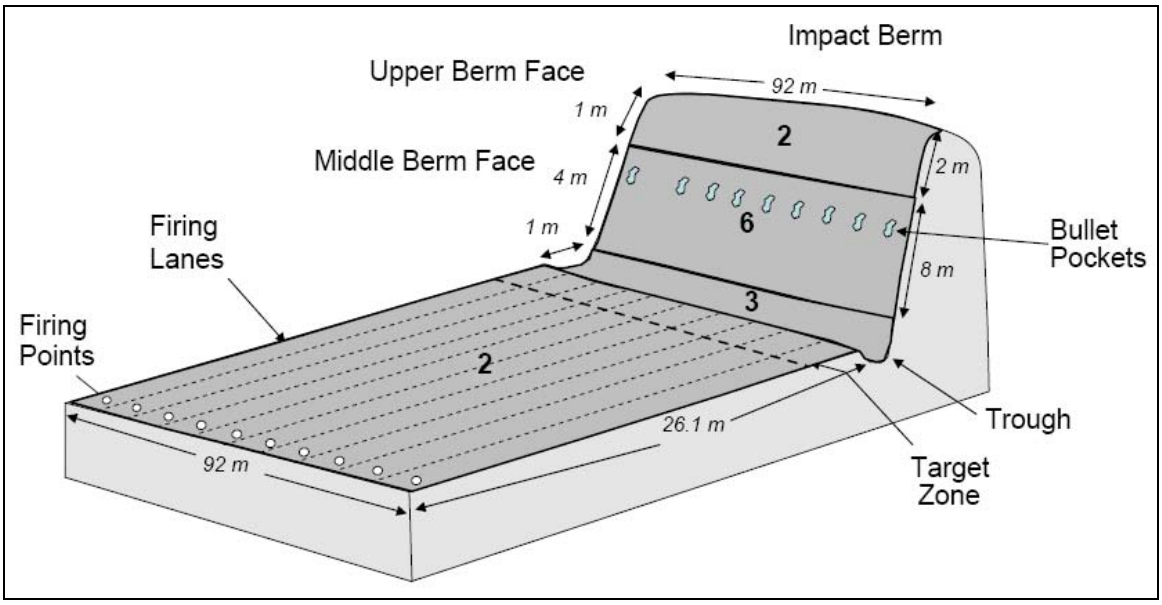

Figure 10. Decision units for Charlie Range and number of surface soil samples collected.

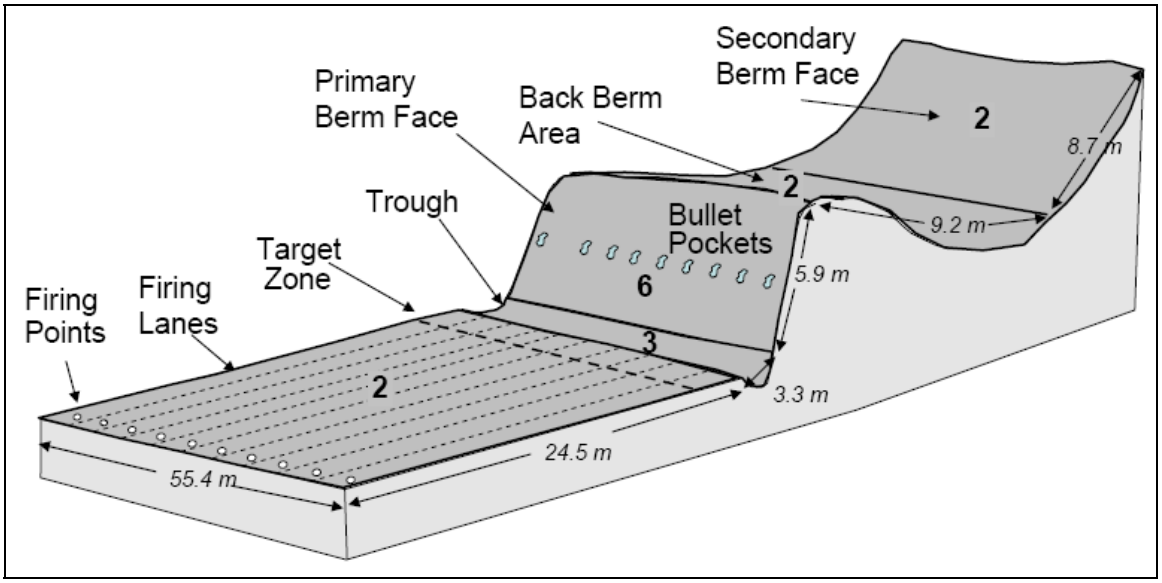

Figure 11. Decision units for India Range and number of surface soil samples collected.

Surface Soil

Surface soil samples were collected from five areas on the firing range: the firing point, the range floor, the target, the trough in front of the impact berm, and the berm (Fig. 9, 10, and 11). Within each of these areas one or more decision units were sampled. Because the firing lanes located in the center of the training range are typically more heavily used (personal communication, Range Control), we consulted with range control before dividing the range into decision units. A 100-increment sample of the top 5 cm was obtained at evenly spaced locations throughout each decision unit. Two to three multi-increment samples were collected in each decision unit to evaluate the uncertainty associated with this sampling strategy (Ramsey and Suggs 2001). Plastic syringes (1.25-cm ID), metal scoops, or a metal corer (5-cm ID) (Fig. 12) were used to sample the top 5 cm. The samples typically weighed 3 to 5 kg. A total of 69 surface soil samples, including four background samples, was collected (Table 2).

Figure 12. Subsurface soil sample corer.

Table 2. Number of surface and subsurface samples collected at B, C, and I Ranges at Camp Edwards.

	Number of samples		
Surface samples	**B Range**	**C Range**	**I Range**
Firing point	2	2	2
Range floor	4		
Target	3		
Trough	5	3	3
Impact berm			
Upper berm	2	2	6
Middle berm	11	6	
Lower berm	10		
Back berm	NA	NA	2
2nd berm	NA	NA	2
Background*	1	1	1
TOTAL	**38**	**14**	**16**
Subsurface samples			
Bullet pocket	24	18	9
Trough cores	15	6	0
TOTAL	**39**	**24**	**9**

* One background surface soil sample was collected near M Range.
NA Not applicable

We sampled the firing point, a rectangular area the length of the firing line and 3 m immediately in front of the firing line, as a single decision unit at B Range (Fig. 9 and Table 2). Duplicate surface soil samples were collected from this decision unit. Because tungsten was not found at detectable levels by XRF analysis at the firing point, we did not sample the subsurface soil.

The area between the firing point and the targets is the range floor. At B Range, the range floor was divided into three decision units parallel to the firing lanes (Fig. 9 and Table 2) and the middle portion was subdivided into two decision units perpendicular to the firing lanes. Duplicate multi-increment samples were collected from the two center decision units (Fig. 9 and Table 2).

A rectangular decision unit consisting of a row of targets was sampled at B Range. Because the targets at Camp Edwards are constructed of paper and wood, rounds or fragments of rounds were not anticipated or observed at this location; duplicate multi-increment samples were collected in the middle and one from the left side at B Range (Fig. 9 and Table 2). Because XRF analyses at B Range failed to detect tungsten, no subsurface samples were collected. The trough is a trench or low area directly in front of the berm. Soil and water moving down the front face of the berm ends up in the trough. At B Range, surface soil samples were collected from both the right and left sides of the trough, and triplicate samples from the center (Fig. 9).

The berm at B was broken into nine decision units with the center firing lines separated from those on the sides (Fig. 9). The upper berm was sampled as a single decision unit and duplicate multi-increment samples were collected (Fig. 9). The bullet pockets, located within the middle and lower berm areas, were further divided into bullet pocket and between bullet pocket decision units. Erosion was evident on the berm faces at all three ranges with bullet pocket material sloughing from the middle berm area into the lower berm and/or trough. A similar approach was used in the lower berm area with samples collected from soil sloughing from the bullet pockets and from areas between the sloughed materials. Thus, at B Range, 23 surface soil samples were collected from the berm (Table 2).

Based on tungsten levels we found at B Range, below-detection levels at firing point, range floor, and target areas surface soils, at C and I Ranges all three of these decision units were grouped together into a single decision unit (Fig. 10 and 11, Table 2). Triplicate samples from the entire length of the troughs at C and I Ranges were collected (Fig. 10 and 11, Table 2).

At C Range, the berm face was separated into bullet pocket and between-bullet-pocket decision units, because a good separation was not visible between the bullet pockets and the eroded material. Also, Targets 1 to 29, on the north side of the range, had no berm backstop, so our focus was on targets 30 to 55.

At I Range, the entire berm face was sampled as a single decision unit (middle berm) (Table 2 and Fig. 11). The overall area of the berm face at I Range was much smaller than the other two ranges, the targets are closer together, and the bullet pockets merged. At I Range, surface soil samples were also collected from the backside of the primary berm and the front face of the secondary berm (Fig. 11).

Subsurface Soil

Because tungsten/nylon rounds often break apart upon impact with the soil surface, we thought that most of the tungsten would be in the top 5 cm of the soil. We tested this idea using the portable XRF unit. The XRF showed that only soils beneath the berm and trough contained measurable tungsten, so we collected subsurface soil profile samples from these areas.

The use of the soil profile terminology refers to a number of individual soil samples collected from four separate augured cores. We used a bucket auger to collect samples beneath the bullet pockets and the trough. A multi-increment, subsurface soil sample was made by combining the soils from four cores from the same depth intervals. Samples were collected on 25-cm sample intervals. Therefore, in general, each soil profile sample consisted of material collected from four separate cores. However, it was not possible to achieve the maximum desired depth of 150 cm. Therefore, in some cases, a soil profile sample consisted of less than four increments. The thickness of the sample interval was based on field XRF measurements and preliminary study of a single 60-cm core sampled on 5-cm intervals. In total, eight soil profiles were collected at the B Range (three

from the trough and five from the berm), four at the C Range (one from the trough and three from the berm), and two from the berm at I range. From these soil profiles, a total of 72 multi-increment subsurface soil samples was collected (Table 2). The auger was cleaned between holes and a sample of the rinse water was checked for cross contamination.

Background samples

To establish the background tungsten levels at Camp Edwards, two 100-increment (C and I Ranges) and one 50-increment (B Range) surface soil samples were collected behind the firing lines. At B and C Ranges, samples were collected in the wooded area behind the parking areas, whereas at I they were collected in a grassy area next to the parking area. These sites had more organic material than the soil used for constructing the impact berm. Therefore, a fourth background sample was collected in the area of M Range, where sand and gravel are present. This location is remote and should not have tungsten.

Water

The IAGWSP contractors followed IAGWSP procedures to collect groundwater samples. Lysimeter samples were collected using best management practices since no formalized procedures exist. Samples were stored cold to minimize speciation changes that could influence dissolved metal levels. Field measurements of pH, dissolved oxygen (DO), specific conductance, temperature, turbidity, and E_h or oxidation-reduction potential (ORP) were obtained with a YSI meter, Model 556 MPS. Only the specific conductance, temperature, and metals were measured in the first three rounds of lysimeter sampling because of volume limitations. During the fourth round of sampling, complete field measurements were collected.

Lysimeters are devices used to collect soil pore-water samples from unsaturated soil. An advantage of sampling soil pore-water rather than bulk soil is that it provides the link between the presence of a contaminant and its fate and transport. Also, the reporting limit associated with analyses of water samples is often an order of magnitude lower than the reporting limit using the same method for soil samples. Soil samples also typically have a greater degree of matrix interference than water samples. Details on how we installed and sampled the lysimeters are provided in Appendix A.

Water samples from four groundwater monitoring wells (MW-72S, MW-123S, MW-135M2, and MW-404S) were sampled in coordination with the IAGWSP at Camp Edwards. Well MW-72S is located on the downgradient side approximately 6 m from the B Range berm on the range floor. Well MW-123S is located downgradient of the C Range but intercepts water from only the northern part of the range where no tungsten/nylon rounds were fired. MW-135M2 is located south of the B and C Ranges and MW-404S is located cross gradient of the Demolition 2 area. The two wells, MW-135M2 and MW-404S, are thought to be located in areas free from any tungsten small arms range firing. Well MW-72S was sampled on 15 December 2005, MW-404S was sampled on 22 December 2005, and MW-123S and MW-135M2 were sampled on 27 December 2005. A second round of groundwater samples was taken on 8 February 2006, a third on 10 May 2006, and a fourth on 16 June 2006.

The majority of monitoring wells at Camp Edwards have dedicated bladder pumps. Groundwater samples were collected following standard low-flow sampling techniques as outlined by the EPA (1996). Samples were collected through a flow-through cell for field parameter measurement unit to minimize exposure of the water to the atmosphere. Two sets of water samples were collected. One set was unfiltered and yielded a total metal analysis. The second set was filtered using a 0.45-um filter in the laboratory, yielding the dissolved metal species.

Sample Preparation

Soil

Soil samples were transported back to the laboratory and air-dried on aluminum-foil-lined trays. Air-dried samples were passed through a 2-mm sieve. The soil samples collected from B, C, and I Ranges were ground at ERDC-EL using a Lab Tech ball mill, PM400, utilizing a metal-free agate bowl and balls. The ground portion of the samples, less than 3 kg, was combined on a new sheet of aluminum foil and mixed prior to subsampling. Ground portions of samples > 3 kg were returned to the sample bag for mixing.

Sample digestions were performed for metal analysis following a modified EPA SW-846, Method 3051, using microwave heating. This method was modified by adding phosphoric acid to the digestion process and changing

the composition of the solution used to rinse the filter media. The modified method uses 8 mL of concentrated nitric acid and 2 mL of concentrated phosphoric acid (both trace-metal grade) as the digestion solution for 2 g of ground soil. The purpose for the change in digestion acid is to prevent the formation of polytungstates and keep the tungsten in a soluble form. Data presented later documents that the unmodified Method 3051 procedure results in an underestimation of the tungsten in the sample. Method 3051 specifies the digestion of 0.5 g; however, digestion of 2 to 5 g was used to obtain a more representative value. The sample aliquot for digestion was built by collecting 20 portions from the sample bag. Following digestion and filtration as described in Method 3051, the sample and filter paper were washed with a 2-percent concentrated phosphoric acid solution. The volume of the digested sample was adjusted to 100 mL with ultra-pure water.

Water

The sample preparation procedure for metals in water, Method 3050, typically involves preserving the water sample by adding a small volume of 2-percent concentrated hydrochloric acid. However, acidification can influence metal solubility and speciation. Using concentrated acid is especially problematic when determining tungsten because acids can form insoluble tungstates and polytungstates. The polytungstates also can bind to silica in glass and produce unrecoverable solid tungstate residues in sample containers. Therefore, samples were collected in unacidified plastic bottles and immediately placed in a cooler with ice. Future studies are planned to evaluate collection and preservation methods. Samples obtained for general metals analysis were collected in separate bottles. The unfiltered samples were placed in a sample bottle containing acid. The filtered metal samples were collected in an unacidified sample bottle, filtered at ERDC-CRREL, acidified with nitric acid, and then shipped to ERDC-EL for analysis.

Sample Analysis

Soil

Several different ICP instruments were utilized during this study. Most of the soil samples were analyzed at ERDC-EL using a Perkin Elmer Optima 4300 DV ICP-atomic emission spectrometer (ICP/AES) following EPA

SW-846 Method 6010A. Also, the first three rounds of lysimeter samples and the first groundwater samples were analyzed with the ICP-AES. All of the background soil and water samples were analyzed with a Perkin Elmer Sciex ELAN 6000 ICP/MS instrument following EPA SW-846 Method 6020. Samples with non-detectable levels of tungsten by ICP/AES, the fourth round of lysimeter samples, and all of the groundwater samples were analyzed with the ICP/MS.

To generate a standard curve for quantitation, 0.010-, 0.100-, 1.00-, 10-, and 50-mg/L standards were used. Linearity was achieved over the concentration range of the standards. A MDL of 0.3 mg/kg was obtained for tungsten by ICP-AES analysis following EPA guidelines (USEPA 2000). The corresponding practical quantitation limit (PQL) for tungsten is 1.7 mg/kg.

Water

A set of seven waters spiked at 5 µg/L yielded an MDL of 1.7 µg/L for tungsten using the ICP-AES following EPA guidelines for MDL development (USEPA 2000). This corresponds to a laboratory PQL of 8.6 µg/L. The ICP/MS has a MDL and PQL of 0.04 and 0.40 µg/L, respectively, approximately one to two orders of magnitude lower than the ICP-AES. The ICP-MS was calibrated using 1-, 10-, and 100-µg/L standards with initial calibration verification (ICV), and continuing calibration verification (CCV) 10-µg/L standards. Tungsten was quantified and confirmed by measuring ion intensities at two isotopes, m/z 182 and 184; the isobaric osmium interference at m/z 184 was corrected by monitoring m/z 189.

Also, all of the groundwater samples and a select number of lysimeter samples were sent to Northern Arizona University for confirmatory analysis using a magnetic sector ICP/MS. A VG Axiom MC instrument was operated in the single-collector, electron-multiplier mode. An electrostatic scanning, peak-jump integration routine was performed using the flat-top regions of the $^{183}W^{+}$ and $^{191}Ir^{+}$ peaks. Data collection for each solution consisted of three sequential integrations of approximately 20 seconds acquisition time. The 50-µg/L standard was re-analyzed at the end of the analytical sequence to verify continuing calibration.

Each sample solution consisted of 50-µL aliquots mixed with an iridium internal standard (500 µL of 10 mg/L stock) and the mixtures were diluted

to 50 mL with 1-percent aqueous nitric acid (trace-metal grade). Two sets of matrix-matched standards were prepared, one for the nitric-phosphoric preparations and another for the pyrosulfate digestion experiments (discussed later). Standards for soil digests contained 0, 50, and 100 µg/L tungsten and standards for water analyses were prepared at 0.5 and 1 ug/L. All standards and diluted samples contained 100 µg/L iridium. An independent tungsten standard was prepared at 100 µg/L. The MDL for the first round of water samples was 0.02 ug/L with an associated PQL of 0.2 ug/L. Further refinement of the analytical method allowed for a reduction of the MDL to 0.01 ug/L with a PQL of 0.1 ug/L for subsequent water sampling rounds. The analytical process was the same for soil and water samples with the higher concentrations standards used for the soil analysis owing to the much higher tungsten concentrations.

Other Methods

Three different XRF units were used to screen samples for tungsten: a Niton Model XLi/XLp 722 bulk sample analyzer calibrated for tungsten with a radioisotope source, a Niton XLt 800 with an electron tube, and an Innov-X Model System A-4000 alloy metals analyzer with the M4000S soil analysis package and electron tube. The portable XRF units were used to measure tungsten and other metals in the field as well as in the laboratory. Previous work on copper, lead, and zinc showed that the XLi/XLp 722 provided results comparable to results obtained when the soils were digested and quantified using inductively coupled plasma mass spectrometry (ICP/MS) (Walsh 2004). A goal was to determine whether the XRF was a reliable screening tool for tungsten in soils by comparing XRF results with those obtained with an inductively coupled plasma mass spectrometry (ICP/MS). The advantages of XRF are portability, rapid determination of several metals, low cost of sample analysis, and a nondestructive analytical process. The XRF's detection capability for tungsten is around 50 to 100 (mg/kg), higher than the approximate 5-mg/kg detection limit for the ICP/MS. XRF data, results, and discussion are provided in Appendix B.

The mineralogy of the soil was determined by X-ray diffraction (XRD) using a Philips D-500 XRD at Dartmouth College. Details of the analyses and the results of XRD work are presented in Appendix C.

An XL-30 ESEM-FEG scanning electron microscope (SEM) located at Dartmouth College was used to identify the physical form and distribution

of tungsten particles in the bullets and in the soil, and to image the microscopic structure of the soil. These results are presented in Appendix D.

Our intent was to measure the surface area of the tungsten powder used in the tungsten/nylon bullets with the Brunauer, Emmett, and Teller (BET) method. The surface area of the tungsten is an important parameter for determining dissolution and other properties that are strongly influenced by particle surface area. However, we could not obtain tungsten powder from the manufacturer. We considered measuring the surface area of a tungsten/nylon bullet either intact or disaggregated, but the surface area of the nylon would overwhelm that of the tungsten. For this reason, BET measurements were not made, although alternative approaches, such as dissolving the nylon, are still being considered.

A tungsten/nylon bullet fragment was placed on a porous glass frit at the base of a glass holder. Using a syringe pump, Milli-Q distilled water (pH 6) was dripped onto the bullet fragment at a rate of 0.51 mL/hr, consisting of approximately 30-µL drops at a rate of 20 drops/hr. The equivalent rainfall or steady-slow rate is 5.5 mm/hr. The water flowed through the frit into a pre-cleaned scintillation vial. The vial was changed each day (12 mL water collected daily) and the experiment ran for 30 days.

For each range, in addition to metals soil analysis, a number of soil samples were analyzed for major cations and total phosphate phosphorous (Method 6010), pH (Method 9040), specific conductance, and organic carbon (Method 9060). Similarly, 10 samples of soil pore-water were analyzed for major cations, specific conductance, total phosphate phosphorous, organic carbon, total dissolved solids, and total suspended solids. Field parameters of pH, DO, specific conductance, temperature, and E_h or ORP were measured using a YSI Environmental Model 556 meter.

6 QUALITY ASSURANCE/QUALITY CONTROL

Table 3 outlines the laboratory quality assurance/quality control (QA/QC) procedures followed by ERDC-EL during the course of this study. Initially a calibration standard was run to assess the instrument's precision; a calibration blank and an inter-element standard also were run. Once samples were being analyzed, a calibration blank and a CCV standard were run after every 10 samples. For each batch run, a method blank, laboratory control sample, matrix spike, matrix duplicate, and matrix spike duplicate were prepared and analyzed. A post-serial dilution, serial dilution, or method of standard additions was conducted as needed. Four soil sample sets were shipped to ERDC-EL for preparation and analysis. Each sample set was broken into four batches of approximately ten samples. The QA/QC targets for all soil and all water batches were achieved (Table 4).

Standards

Soil

A second source tungsten standard with a known concentration of 60 mg/kg was analyzed with the ICP-AES. Analysis of three replicates yielded concentrations of 66.7, 58.4, and 62.7 mg/kg, with a mean concentration of 62.6 mg/kg. The standard deviation was 4.11 mg/kg with a percent relative standard deviation of 6.6 mg/kg. The sample preparation procedures followed EPA Method 3051. Larson et al. (2006) demonstrated improved digestion recoveries using a nitric/phosphoric acid digestion. Using this digestion we again analyzed the tungsten standard using the Modified EPA Method 3051 and obtained an average soil concentration of 59 mg/kg for three replicates or 98 percent recovery. Since the results between the Modified and Standard EPA Method marginally differed, the method modifications were explored in more detail and discussed in the Results section.

Table 3. Quality control elements, frequency of implementation, and acceptance criteria followed for analysis of tungsten and heavy metals in soils and waters.

Quality control element	Description of element	Frequency of implementation	Acceptance criteria
Initial calibration	Option 1: One standard and blank, and low-level check standard at MQL Option 2: Three standards and blank	Daily	Option 1: Low-level check standard ± 20% Option 2: r ≥ 0.995
Instrumental precision	Percent RSD of 3 integrations (exposures)	Each calibration and calibration standards (ICV/CCV)	% RSD < 5%
ICV	Mid-level (2nd source) verification	After initial calibration	% Recovery ± 10%
ICB	Interference-free matrix to assess analysis contamination	After initial calibration	Analytes < MDL, check sample (~2X MDL)
ICS	ICS-A: Interferents only ICS-B: Interferents and target analytes	Beginning of analytical sequence	% Recovery ± 20% for target analytes
CCB	Interference-free matrix to assess analysis contamination	Every 10 samples and at end of analytical sequence	Analytes < MDL, check sample (~2X MDL)
CCV	Mid-level verification	Every 10 samples and at end of analytical sequence	% Recovery ± 10%
Method blank	Interference-free matrix to assess overall method contamination	1 per sample batch	Analytes < MDL, check sample (~2X MDL)
LCS	Interference-free matrix containing all target analytes	1 per sample batch	% Recovery = 80-120% SMF: % Recovery = 60–140%
Matrix spike	Sample matrix spiked with all/ subset of target analytes prior to digestion	1 per sample batch	% Recovery = 75–125%
Matrix duplicate or MSD	Refer to text for MD or MS	1 per sample batch	RPD ≤ 25%
PSD	Sample digestate spiked with all/subset of target analytes	As needed to confirm matrix effects	% Recovery = 75%–125%
SD	1:4 dilution analyzed to assess matrix effects	As needed to assess new and unusual matrices	Agreement between undiluted and diluted results ± 10%
MSA	Method of quantitation	As needed for samples with suspected or confirmed matrix effects	r ≥ 0.995

The number of Sporadic Marginal Failure (SMF) allowances depends on the number of target analytes reported from the analysis. In the instance of 7 to 15 metals reported from the ICP analysis, one SMF is allowed to the expanded criteria presented.

CCB	Continuing calibration blank	LCS	Laboratory control sample	MSD	Matrix spike duplicate
CCV	Continuing calibration verification	MD	Matrix duplicate	PSD	Post-serial dilution
ICB	Initial calibration blank	MDL	Method detection limit	SD	Serial dilution
ICS	Inter-element check standards	MS	Matrix spike	RPD	Relative percent difference
ICV	Initial calibration verification	MSA	Method of standard additions	RSD	Relative standard deviation

Table 4. Quality control sample results.

Matrix	Soil											Acceptance criteria
Batch #	Batch 1	Batch 2	Batch 3	Batch 4	Batch 1	Batch 2	Batch 3	Batch 4	Batch 1	Batch 2	Batch 3	
Date	8/24/05	8/31/05	9/2/05	9/8/05	9/13/05	9/16/05	9/21/05	9/22/05	10/5/05	10/11/05	10/14/05	
Initial calibration									0.999	0.999	0.999	> 0.995
ICS	91%	85%	86%	101%	99%	98%	99%					80–120%
ICV	101%	96%	97%	101%	100%	100%	100%	102%	100%	100%	102%	90–110%
ICB	< 0.05	< 0.05	< 0.05	< 0.05	< 0.05	< 0.05	< 0.05	< 0.05	< 0.05	< 0.05	< 0.05	< MDL
LCS	95%	92%	96%	101%	101%	83%	104%	102%	96%	97%	109%	80–120%
MB	< 0.05	< 0.05	< 0.05	< 0.05	< 0.05	< 0.05	< 0.05	< 0.05	< 0.05	< 0.05	< 0.05	< MDL
MS	103%			104%			119%	80%	87%	95%	106%	75–125%
MSD	119%			119%			115%	93%	84%	98%	88%	75–125%
PDS	96%	96%	96%	96%								75–125%
SD	9%	9%	9%	9%								< 10%
CCV1	99%	101%	104%	106%	104%	110%	107%	110%	100%	101%	106%	90–110%
CCV2	10%	102%	106%	106%	105%	108%	103%		98%	102%	109%	90–110%
CCV3	106%	102%			105%	102%						90–110%
CCV4	108%	102%				10%						90–110%
CCV5	110%	101%				98%						90–110%
CCV6		99%										90–110%
CCV7		100%										90–110%
CCB1	< 0.05	< 0.05	< 0.05	< 0.05	< 0.05	< 0.05	< 0.05	< 0.05	< 0.05	< 0.05	< 0.05	< MDL
CCB2	< 0.05	< 0.05	< 0.05	< 0.05	< 0.05	< 0.05	< 0.05		< 0.05	< 0.05	< 0.05	< MDL
CCB3	< 0.05	< 0.05			< 0.05	< 0.05						< MDL
CCB4	< 0.05	< 0.05				< 0.05						< MDL
CCB5	< 0.05	< 0.05				< 0.05						< MDL

Table 4 (cont'd). Quality control sample results.

Matrix	Soil		Water	Soil			Water					Acceptance criteria
Batch #	Batch 4	Batch 1		Batch 2	Batch 3	Batch 4						
Date	10/18/05	10/24/05	10/24/05	10/28/05	11/7/05	11/9/05	11/9/05	12/22/05	5/24/06	6/29/06	7/10/06	
Initial calibration	0.999	0.998	0.999	0.999	0.999	0.999	0.997	0.999				> 0.995
Instrument precision	98%	103%	103%	101	98.55%	101%	98%	101%				90–110%
Calibration blank	< 0.05	< 0.05	< 0.05	< 0.05	< 0.05	< 0.05	< 0.05	< 0.05				< MDL
LCS	96%	104%	111%	90%	104.20%	101%	112%	111%				80–120%
MB	< 0.05	< 0.05	< 0.05	< 0.05	< 0.05	< 0.05	< 0.05	< 0.05				< MDL
MS	106%	82%	113%	97%	111.70%	112%	113%	113%				75–125%
MSD	100%	121%	114%	92%	103.80%	112%	113%	113%				75–125%
Standard 1	99	108%	100%	95%	102.05%	105%	97%	102%	101%		10	90–110%
CCV 2	101%	110%	99%	99%	103.50%	106%	97%	102%				90–110%
Continuing calibration blank 1	< 0.05	< 0.05	< 0.05	< 0.05	< 0.05	< 0.05	< 0.05	< 0.05	< 1	0.026	< 0.2	< MDL
CCB 2	< 0.05	< 0.05	< 0.05	< 0.05	< 0.05	< 0.05	< 0.05	< 0.05		0.021		< MDL
WC 1										110		%
WC 2										115		%
WC 1A										114		%
Spike recovery 1										119	102	%
Spike recovery 2										118		%
WCCV % recovery										113		%
PBS 1										< 0.2		%
PBS 2										< 0.2		%

CCB Continuing calibration blank
CCV Continuing calibration verification
ICB Initial calibration blank
ICS Inter-element check standards
ICV Initial calibration verification
LCS Laboratory control sample
MB Matrix blank
MD Matrix duplicate
MDL Method detection limit
MS Matrix spike
MSA Method of standard additions
MSD Matrix spike duplicate
PBS Preparation blank sample or method blank sample
PSD Post-serial dilution
SD Serial dilution
RPD Relative percent difference
RSD Relative standard deviation
WC Tungsten check standard
WCCV Tungsten continuing calibration verification

A secondary source tungsten powder sample with a known concentration of 340 mg/kg was analyzed using the Modified EPA 3051 Method for digestion. Analysis on the ICP-AES yielded a tungsten value of 308 mg/kg (91% recovery). Similarly, a tungsten powder sample with a known concentration of 10,000 mg/kg yielded a result of 8,251 mg/kg (82% recovery). A sodium tungstate crystalline solid having a known concentration of 10,000 mg/kg yielded a concentration of 8,192 mg/kg (82% recovery). Another sodium tungstate crystalline solid with a known concentration of 3,000 mg/kg yielded a concentration of 3,077 mg/kg (103% recovery).

Water

The internal standard for the ICP-AES was a 20-mg/L concentration of scandium mixed on line at a 1:20 ratio. The internal standard for the ICP-MS was a 100 µg/L terbium and rhodium stock solution mixed on line at a 1:20 ratio. In both cases, the reported concentrations after analysis were within the QA/QC guidelines, listed in Table 3.

A tungsten 5-µg/L Performance Evaluation standard provided by the US Army Corps of Engineers–New England District yielded a concentration of 4.7 µg/L. To assess the laboratory precision of the ICP-AES, a 1.0-mg/L laboratory control sample was included with each sample batch analyzed.

During the desorption/sorption tests discussed later, a series of QA/QC checks were performed to assess the stability of tungsten standards, tungsten presence in blank samples, and carryover issues during analysis. For the blank tests, 5-mL aliquots of the solutions prepared for the third batch tests were passed through a 0.45-µm hydrophilic filter and prepared for analysis. For the shelf life test, 9 mL of the soil–water mixture was removed from the second batch test solution after that test was complete. After 3 hrs, 7 mL of the 9-mL solution was passed through a 0.45-µm hydrophilic filter into a new bottle. The procedure was repeated after 24 hrs, when 5 mL of the above aliquot was again filtered into a new bottle. To check for pH effects on the tungsten concentration, a 9-mL aliquot was collected from the second batch test. The solution was not pH-adjusted but was filtered with 2 mL set aside for analysis. The remainder was acidified to pH 1.37 with 0.5 M HCl and filtered, and 2 mL was saved for analysis. The last 5 mL of solution was adjusted to pH 11.19 with 0.5 M NaOH, filtered, and set aside for analysis. The shelf life tests showed no difference in tungsten concentration among aliquots taken 24 hrs apart. Blank samples

collected during the tests discussed above contained approximately 0.04 µg/L tungsten. We suspect an instrument carry-over issue, which is planned to be explored in subsequent studies.

7 RESULTS

Throughout the following sections, the discussion of tungsten soil concentrations refers to the concentration of tungsten in the < 2-mm soil-size fraction. A practical method for quantifying the amount of tungsten in the > 2-mm soil-size fraction was not attained. When results of the > 2-mm soil-size fraction are presented or discussed, they will be identified in the text.

Field Measurements

Surface and subsurface soil, soil pore-water, and groundwater samples were collected. Twenty-five tension lysimeters were installed and sampled four times for the presence of pore-water. Also, four monitoring wells were sampled during four different sampling events to assess groundwater conditions. As previously indicated, 137 soil samples were collected from Ranges B, C, and I at Camp Edwards (Table 2).

Soil

In addition to soil samples being collected and analyzed for tungsten, all samples were analyzed for the metals (antimony, arsenic, chromium, copper, iron, lead, manganese, molybdenum, nickel, vanadium, and zinc) by ICP-AES. The metals are not discussed in detail in this document although the results are provided in Appendix E. A cursory examination of the data revealed a strong correlation between tungsten and copper and tungsten and zinc at $p = 0.68$ and 0.80, respectively, for $n = 118$ with $\alpha = 0.05$. Copper, lead, and zinc are secondary metals used in the tungsten/nylon projectiles as well as the standard lead projectiles. Both lead and tungsten projectiles were fired at the same targets on B, C, and I Ranges.

Thirty-two samples were analyzed for soil pH with two field duplicates collected. Soil pH ranged from 6.2 to 7.4 with a median value of 6.5. There was no indication of pH difference by decision unit or background levels. For comparison, the pH level of the four background samples ranged from 6.4 to 7.0. At two locations, pH was measured with depth and no changes were evident.

Since the soil also was previously treated with the phosphate-based Maectite material, the concentration of phosphate as phosphorous was measured. Phosphate phosphorous soil concentrations ranged from 5.6 to 27.5 mg/kg with a mean concentration of 16.1 mg/kg.

Bravo (B) Range

Thirty-seven surface soil samples (0–5 cm) were collected at B Range (Table 5) from 14 separate decision units (Fig. 9). Highest concentrations were observed in the middle berm area where the bullet pockets are located (Fig. 13). The mean soil concentration for this area was 1,030 mg/kg. The second highest tungsten concentrations based on the mean were observed in the trough area (549 mg/kg), followed by the lower berm (498 mg/kg), upper berm (369 mg/kg), target (95 mg/kg), range floor (26 mg/kg), and firing point (5.0 mg/kg).

In addition to surface soil samples, 39 multi-increment subsurface soil samples were collected (Table 2). Fifteen samples were collected from the trough area and 24 from bullet pockets on the berm face. The mean of all profile samples declined with depth from 403 mg/kg (0 to 25 cm), 157 mg/kg (25 to 50 cm), 72 mg/kg (50 to 75 cm), 41 mg/kg (75 to 100 cm), to 20 mg/kg (100 to 125 cm) (Fig. 14). One soil profile (consisting of four cores) from the trough was collected and sampled at 5-cm intervals. This profile indicated tungsten levels greater than 1,000 mg/kg in the top 15 cm of soil, followed by two intervals of lower concentration, then a zone of higher tungsten. There was no marked difference in lithology between any of the intervals to explain the higher concentration at depth.

Charlie (C) Range

At C Range, 13 surface soils, one background, and 18 subsurface multi-increment samples were collected (Table 6). The 18 subsurface soil samples were from four soil profiles with each profile made up of four individual cores.

As with B Range, the surface soil samples from C Range had the highest tungsten concentrations in the middle berm area and the lowest at the firing point/range floor/target. The mean tungsten concentration for all middle berm samples was 1,048 mg/kg, followed by 315 mg/kg for the

trough, 222 mg/kg for the upper berm, and 11 mg/kg for a sample covering the firing point, range floor, and target areas (Fig. 15).

Table 5. Bravo Range surface soil samples.

Sample ID	Location	# of incre-ments	Field rep	Sampler type	Total dry weight < 2 mm (g)	Total dry weight > 2 mm (g)	Field sample collection date	Analysis date	Tungsten (mg/kg)
MMRBFP006S1	FP 19-37	112	1	W	NA	NA	7/11/05	8/26/05	5.5
MMRBFP007S2	FP 19-37	91	2	W	NA	NA	7/11/05	8/26/05	4.4
MMRBRF008S1	RF 19-37	110	1	W	NA	NA	7/11/05	8/26/05	15.9
MMRBRF009S2	RF 19-37	110	2	W	NA	NA	7/11/05	8/26/05	15.2
MMRBUB010S1	UB 1-55	111	1	W	2410	301	7/11/05	9/21/05	390
MMRBUB011S2	UB 1-55	104	2	W	2220	312	7/11/05	9/16/05	349
MMRBRF012S1	RF 19-37	100	1	W	NA	NA	7/11/05	8/26/05	31.7
MMRBRF013S2	RF 19-37	104	2	W	NA	NA	7/11/05	8/26/05	40.0
MMRBTA019S1	TA 19-37	91	1	W	NA	NA	7/12/05	8/26/05	147
MMRBTA020S	TA 1-18	86	1	W	NA	NA	7/12/05	8/26/05	29.2
MMRBTA021S2	TA 19-37	94	2	W	NA	NA	7/12/05	8/31/05	107
MMRBMB022S1	MB 19-37	95	1	S	2750	660	7/12/05	9/22/05	1530
MMRBMB023S2	MB 19-37	95	2	S	3010	818	7/12/05	9/22/05	1420
MMRBLB024S1	LB 19-37	85	1	W	2680	410	7/12/05	10/5/05	757
MMRBLB025S2	LB 19-37	85	2	W	2290	388	7/12/05	9/22/05	757
MMRBLB026S3	LB 19-37	85	3	W	2640	452	7/12/05	9/22/05	852
MMRBLB027S1	LB 19-37	95	1	S	2690	369	7/12/05	10/5/05	678
MMRBLB028S2	LB 19-37	95	2	S	3560	415	7/12/05	10/18/05	182
MMRBLB029S3	LB 19-37	95	3	S	3150	452	7/12/05	10/11/05	753
MMRBMB030S1	MB 19-37	85	1	W	2490	545	7/12/05	9/16/05	1500
MMRBMB031S2	MB 19-37	85	2	W	2760	551	7/12/05	9/16/05	1370
MMRBMB032S3	MB 19-37	95	3	W	2860	507	7/12/05	10/14/05	1430
MMRBTR033S1	TR 19-37	104	1	W	3520	523	7/12/05	9/13/05	839
MMRBTR034S2	TR 19-37	93	2	W	3190	435	7/12/05	9/21/05	932
MMRBTR035S3	TR 19-37	100	3	W	3190	345	7/12/05	9/21/05	864
MMRBMB036S3	MB 19-37	95	3	S	3030	631	7/12/05	10/5/05	1080
MMRBTR037Sa	TR 1-18	98	NA	W	NA	NA	7/15/05	9/2/05	493
MMRBTR037Sb	TR 1-18	98	NA	W	NA	NA	7/15/05	9/2/05	490
MMRBTR037Sc1	TR 1-18	98	NA	W	NA	NA	7/15/05	9/2/05	469
MMRBTR037Sc2	TR 1-18	98	NA	W	NA	NA	7/15/05	9/2/05	458
MMRBTR037Sc3	TR 1-18	98	NA	W	NA	NA	7/15/05	9/2/05	478
MMRBTR037Sd	TR 1-18	98	NA	W	NA	NA	7/15/05	9/2/05	418
MMRBTR037Se	TR 1-18	98	NA	W	NA	NA	7/15/05	9/2/05	536

Table 5 (cont'd). Bravo Range surface soil samples.

Sample ID	Location	# of incre-ments	Field rep	Sampler type	Total dry weight < 2 mm (g)	Total dry weight > 2 mm (g)	Field sample collection date	Analysis date	Tungsten (mg/kg)
MMRBTR037Sf	TR 1-18	98	NA	W	NA	NA	7/15/05	9/2/05	528
MMRBTR037Sg	TR 1-18	98	NA	W	NA	NA	7/15/05	9/2/05	568
MMRBTR037Sh	TR 1-18	98	NA	W	NA	NA	7/15/05	9/2/05	579
MMRBLB038S	LB 38-55	85	NA	W	1750	211	7/12/05	9/13/05	82.4
MMRBTR039S	TR 38-55	103	NA	W	3050	424	7/12/05	9/21/05	28.8
MMRBMB040S4	MB 38-55	95	4	S	1930	273	7/12/05	10/5/05	676
MMRBLB041S	LB 38-55	90	NA	S	2390	320	7/12/05	10/5/05	288
MMRBMB042S	MB 38-55	85	NA	W	2230	282	7/12/05	9/21/05	220
MMRBLB043S	LB 1-18	90	NA	S	2560	371	7/12/05	10/11/05	488
MMRBMB44S	MB 1-18	90	NA	S	2480	453	7/12/05	10/11/05	778
MMRBBG045S	BG	50	NA	S	NA	NA	7/13/05	8/31/05	1.4
MMRBMB046S	MB 1-18	90	NA	W	2140	343	7/13/05	9/16/05	616
MMRBLB047S	LB 1-18	90	NA	W	2080	271	7/13/05	9/21/05	140
MMRBMB082S	BP38-55	90	2	S	2030	258	7/29/05	10/20/05	716

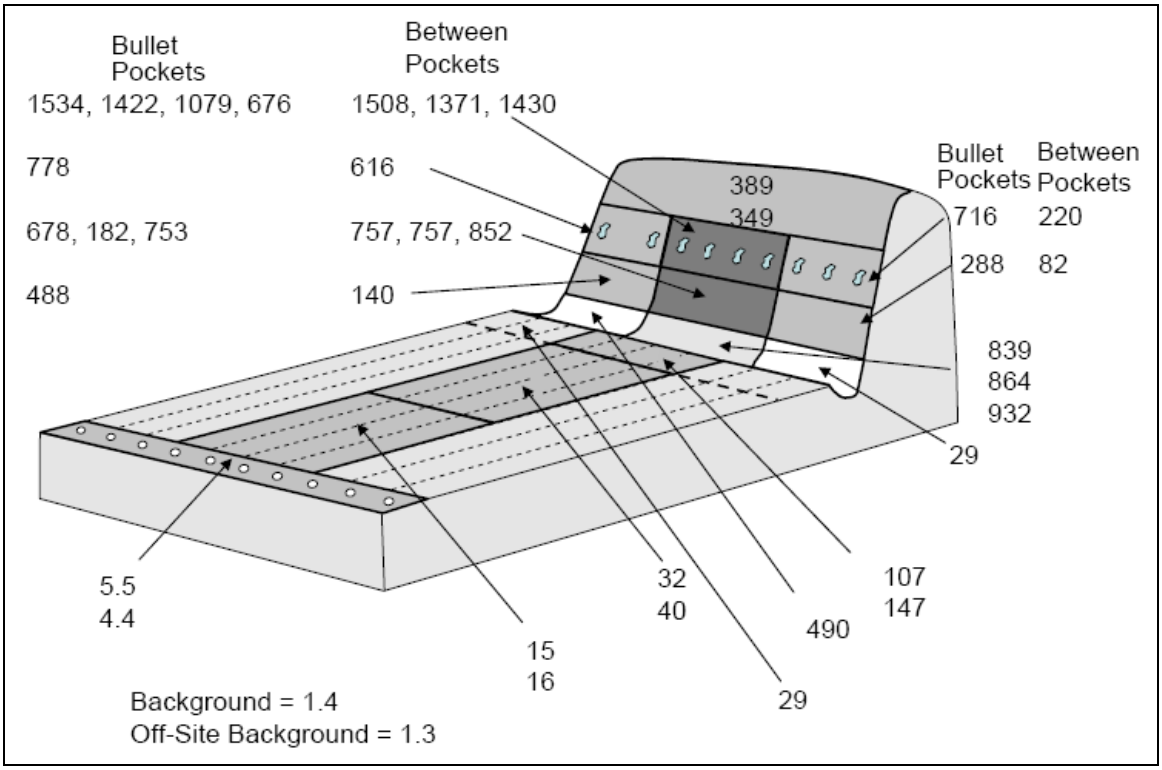

Figure 13. Bravo Range surface soil tungsten concentrations (mg/kg) by decision units.

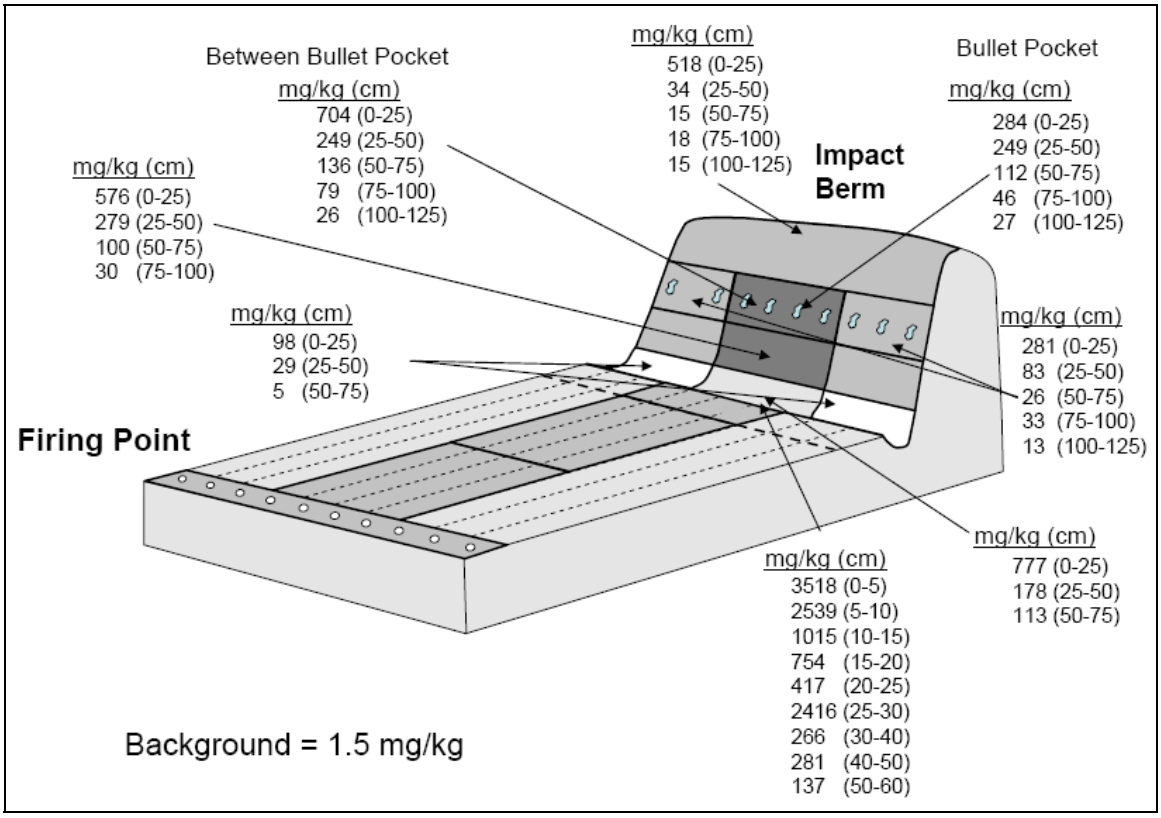

Figure 14. Bravo Range subsurface soil tungsten concentrations (mg/kg).

Three soil profiles yielded 18 subsurface soil samples (Table 2) from the bullet pockets. One soil profile was collected from the trough, yielding six samples. All of the samples showed a decline in tungsten with depth (Fig. 16). The mean tungsten levels for these two decision units declined from 298 mg/kg (0 to 25 cm), to 31 mg/kg (25 to 50 cm), 53 mg/kg (50 to 75 cm), 48 mg/kg (75 to 100 cm), 46 mg/kg (100 to 125 cm), and 34 mg/kg (125+ cm). There was no marked difference in lithology between any of the intervals to explain the higher concentration at depth.

India (I) Range

Twelve surface soil samples were collected at I Range. Here the entire berm face was sampled as a single decision because it is a small berm. Because I Range had a primary and a secondary berm, i.e., a hill behind the primary berm, surface soil samples were collected on the backside of the primary berm and on the secondary berm face. Compared to B and C Ranges, surface soil tungsten levels at I Range (Table 7) were much lower. This is consistent with the fewer rounds fired on I Range (Table 1). However, the distributional pattern of tungsten is similar to that found at B and

C Ranges, with the highest tungsten concentrations found at berm face followed by the trough (Fig. 17). Tungsten was present behind the primary berm face with lower concentrations on the secondary berm face.

Two soil profiles, consisting of four cores each, were collected at I Range, resulting in nine samples. As was the case with the B and C Ranges, the tungsten concentrations declined with increasing depth (Fig. 18).

Table 6. Charlie Range surface soil samples.

Sample ID	Location	# of increments	Field rep	Sampler type	Total dry weight < 2 mm (g)	Total dry weight > 2 mm (g)	Field sample collection date	Analysis date	Tungsten (mg/kg)
MMRCFP-TA001S	FP/TA	125	1	W	NA	NA	7/13/05	8/31/05	9.1
MMRCMB002S1	MB	100	1	S	2970	447	7/15/05	10/11/05	1310
MMRCTR003S1	TR	98	1	W	2470	308	7/15/05	9/21/05	289
MMRCMB004S1	MB	94	1	W	2590	336	7/15/05	9/21/05	579
MMRCMB005S2	MB	100	2	S	2880	489	7/15/05	10/14/05	1500
MMRCTR006S2	TR	100	2	W	2520	276	7/27/05	10/14/05	339
MMRCMB007S3	BP	100	3	S	3580	449	7/27/05	10/14/05	1510
MMRCFP-TA008S2	FP/RF/TA	100	2	W	NA	NA	7/27/05	8/31/05	13.1
MMRCMB009S2	Between BP	100	2	S	1800	234	7/27/05	10/14/05	733
MMRCTR010S3	TR	103	3	W	2510	329	7/27/05	10/5/05	317
MMRCMB011S3	Between BP		3	S	2340	309	7/27/05	10/14/05	672
MMRCBG018S	Back-ground	100	NA	W	NA	NA	7/28/05	8/31/05	1.6
MMRCUB019S1	UB	100	1	S	2120	269	7/28/05	10/11/05	240
MMRCUB020S2	UB	85	2	S	223	165	7/28/05	10/5/05	203

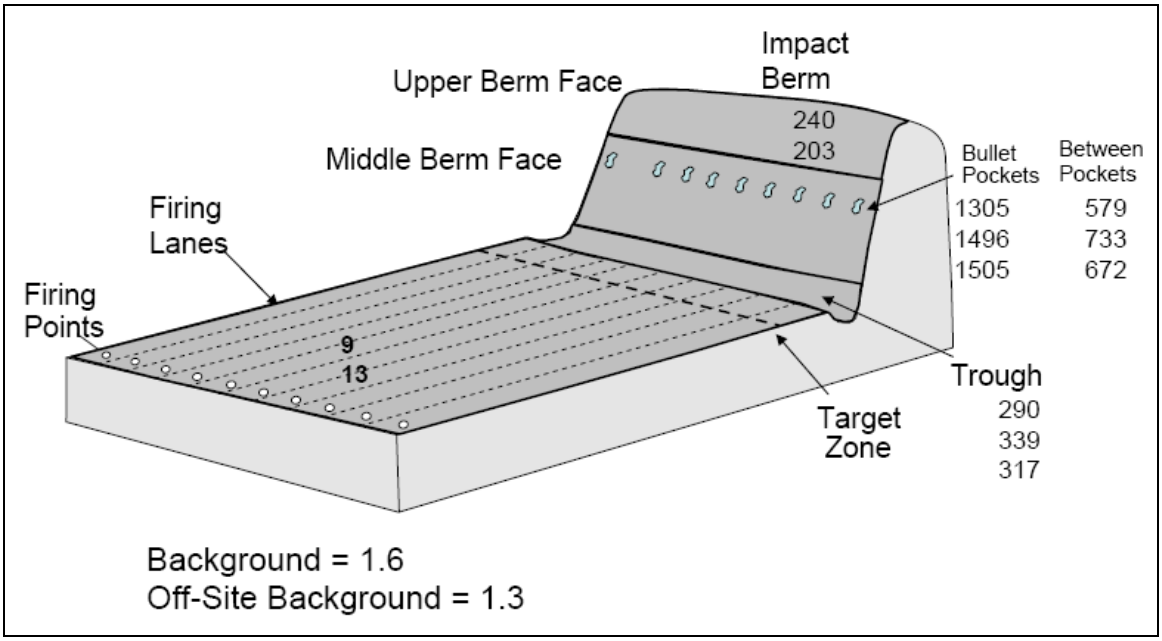

Figure 15. Charlie Range surface soil tungsten concentrations (mg/kg) by decision units.

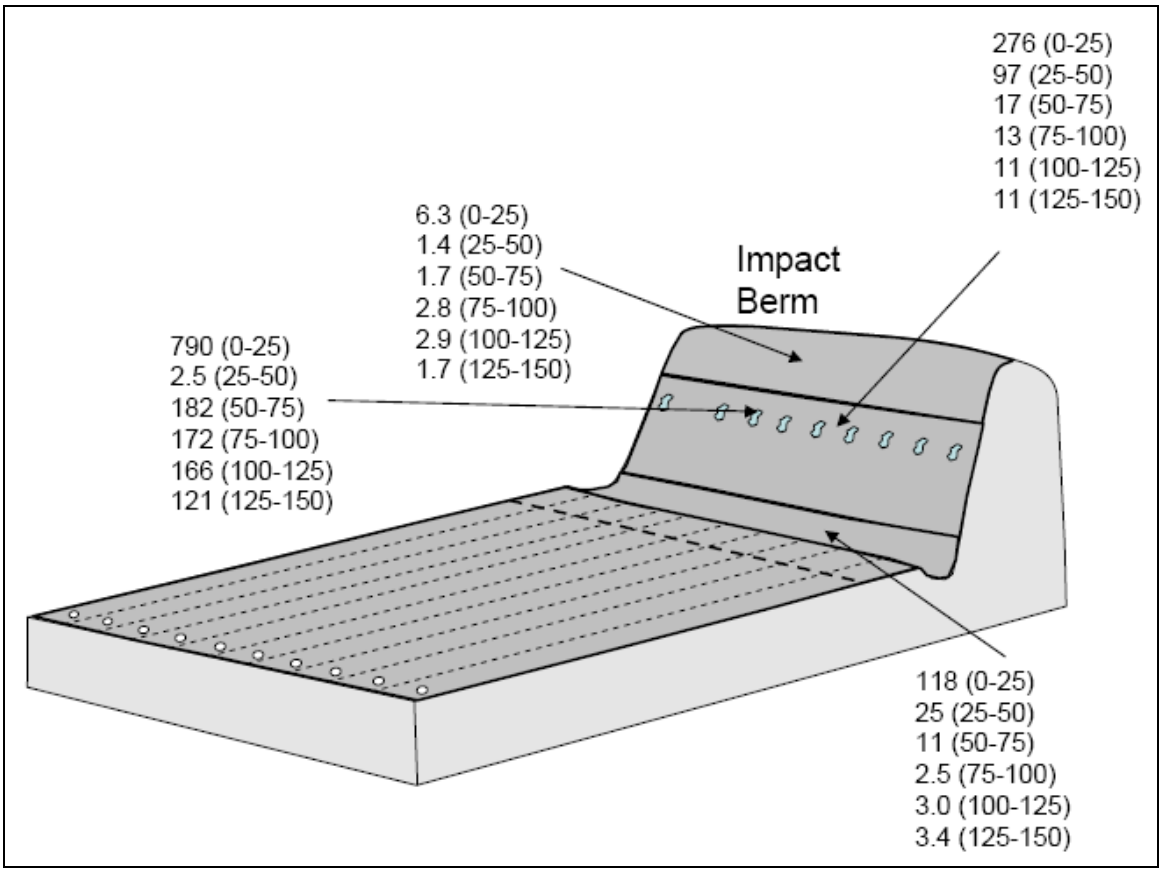

Figure 16. Charlie Range subsurface soil tungsten concentrations (mg/kg).

Table 7. India Range surface soil samples.

Sample ID	Location	# of incre-ments	Field rep	Sampler type	Total dry weight < 2 mm (g)	Total dry weight > 2 mm (g)	Field sample collection date	Analysis date	Result (ppm)
MMRIFP-TA001S1	FP/RF/TA	95	1	W			7/13/05		
MMRITR002S1	TR	70	1	W	2070	403	7/13/05	9/16/05	193
MMRILB003S3	1st berm	82	3	S	2280	359	7/15/05	10/5/05	369
MMRIBB004S1	BB and RF	104	NA	MS	2060	802	7/15/05	9/16/05	113
MMRITR009S2	TR	81	NA	W	2470	494	7/15/05	9/22/05	209
MMRIUB010S1	2nd berm	82	NA	W	2020	337	7/15/05	9/13/05	18.3
MMRILB011S2	1st berm	100	2	S	2790	447	7/15/05	10/14/05	524
MMRILB012S1	1st berm	100	1	S	3070	436	7/15/05	9/22/05	451
MMRITR013S3	TR	100	3	W	3080	594	7/15/05	10/14/05	212
MMRIFP-TA014S2	FP/RF/TA	100	2	W	NA	NA	7/15/05	8/31/05	1.6
MMRIFP-TA014S2a	FP/RF/TA	100	2	W	NA	NA	7/15/05	9/1/05	31.7
MMRIFP-TA014S2b	FP/RF/TA	100	2	W	NA	NA	7/15/05	9/1/05	10.5
MMRIFP-TA014S2c1	FP/RF/TA	100	2	W	NA	NA	7/15/05	9/1/05	13.9
MMRIFP-TA014S2c2	FP/RF/TA	100	2	W	NA	NA	7/15/05	9/1/05	11.4
MMRIFP-TA014S2c3	FP/RF/TA	100	2	W	NA	NA	7/15/05	9/2/05	8.8
MMRIFP-TA014S2d	FP/RF/TA	100	2	W	NA	NA	7/15/05	9/8/05	8.1
MMRIFP-TA014S2e	FP/RF/TA	100	2	W	NA	NA	7/15/05	9/8/05	10.9
MMRIFP-TA014S2f	FP/RF/TA	100	2	W	NA	NA	7/15/05	9/8/05	10.6
MMRIFP-TA014S2g	FP/RF/TA	100	2	W	NA	NA	7/15/05	9/8/05	9.5
MMRIFP-TA014S2h	FP/RF/TA	100	2	W	NA	NA	7/15/05	9/2/05	7.6
MMRIBB018S2	Back berm and RF	100	NA	W	1910	532	7/27/05	10/14/05	101
MMRIUB019S2	2nd berm	100	2	W	2720	354	7/27/05	10/14/05	16.8
MMRIBG020S	Background	100	2	W	NA	NA	7/27/05	8/30/05	1.6

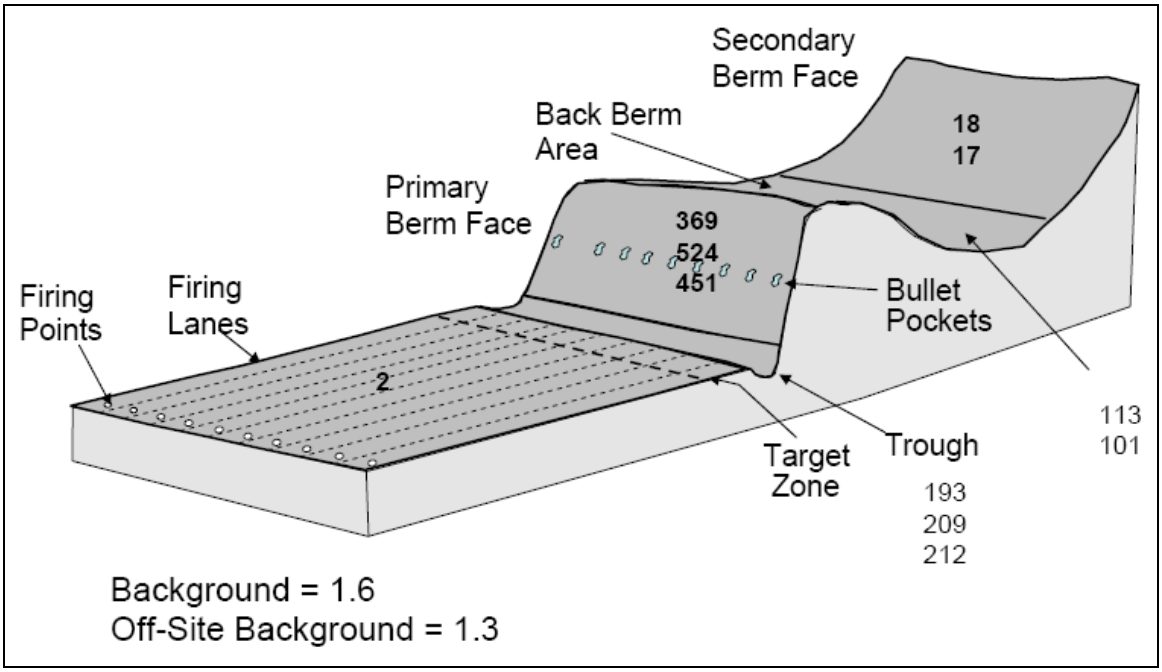

Figure 17. India Range surface soil tungsten concentrations (mg/kg) by decision units.

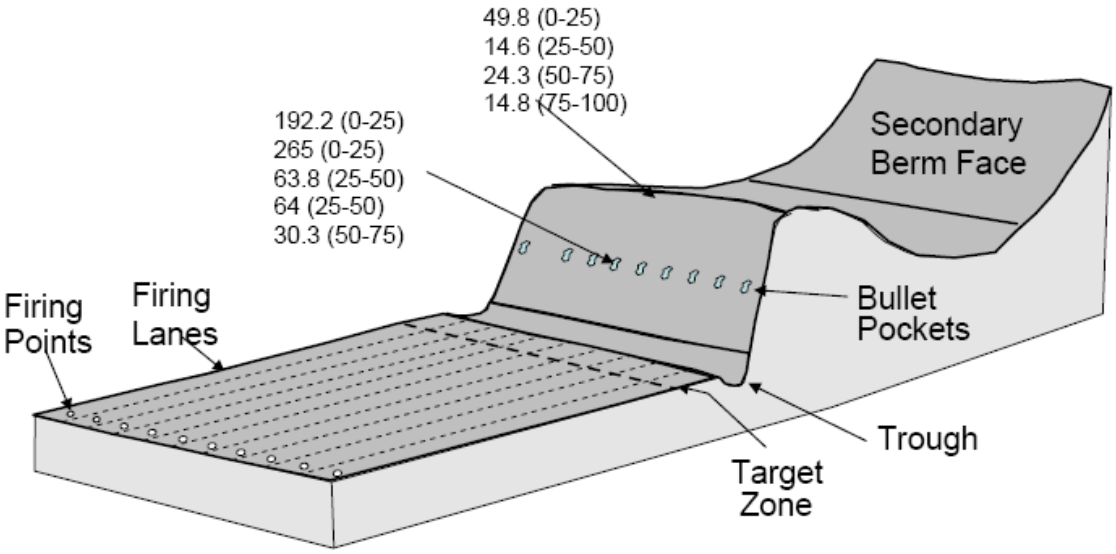

Figure 18. India Range subsurface soil tungsten concentrations (mg/kg).

Background

Background surface soil samples were collected near the B, C, and I small arms ranges with one additional sample collected from a remote location near M Range. A background sample collected behind the firing line in the

woods between the parking area and road at B Range yielded an estimated tungsten concentration of 1.4 mg/kg. This sample consisted of 50 increments collected from a 50- × 50-m area. Samples collected in a similar manner at C and I Range yielded an estimated tungsten concentration of 1.6 mg/kg.

A background sample also was collected from a remote area of the installation near M Range. This sample was collected because of concerns that windblown tungsten particles could have been carried to the background locations near B, C, and I Ranges. According to Range Control, small arms projectiles containing tungsten have not been fired in the area of M Range. This sample, designated as MMRMBG001S, was collected from a 100- × 100-m area and consisted of 100 increments. The resulting tungsten concentration is an estimated 1.3 mg/kg, which is similar to the concentrations observed near the small arms range firing points.

As discussed earlier, the PQL for tungsten in soil is 1.7 mg/kg with a MDL of 0.3 mg/kg. Because all of the background measurements were below the PQL, the tungsten values are considered as estimated values, i.e., "J" flagged. Given that background values are closer to the PQL than the MDL, the uncertainty in the actual value is low and is not likely more than ± 0.3 mg/kg.

Water

Water samples were obtained from tension lysimeters installed in the unsaturated zone within the berm face and trough, and from monitoring wells completed in the aquifer. Both the lysimeters and monitoring wells were sampled four times and analyzed for tungsten and metals. A select number of lysimeter samples were analyzed for TOC, TDS, calcium, magnesium, potassium, sodium, and phosphate phosphorous.

Soil Pore-Water (Lysimeters)

An analysis of TOC, TDS, calcium, magnesium, potassium, sodium, and phosphate phosphorous indicated no spatial, depth, or temporal trends (Appendix F). The median pH of the soil pore-water (6.7) was very close to the median soil pH of 6.5.

Water samples collected from 23 tension lysimeters resulted in tungsten at concentrations varying from less than the detection limit to 400 mg/L (Table 8). Lysimeters at B Range have the highest mean tungsten concentration level at 110 mg/L, followed by C Range at 90 mg/L, with 1.7 mg/L at I Range. The mean value was determined by averaging the results across the four synoptic sampling events for all lysimeters in a given small arms range. The tungsten concentration in the pore-water is lower at I Range, which had lower soil concentrations and mass loading.

Several lysimeters exhibit decreasing or increasing tungsten concentration trends over time. Lysimeters 1, 6, 7, 8, 22, and 26 exhibit declining tungsten levels, whereas lysimeters 17, 18, 20, and 25 are increasing. Four of the lysimeters with declining tungsten concentrations are located at B Range (1, 6, 7, and 8) with the remainder at B Range having no trend (Fig. 19). C Range has two lysimeters with declining levels (22 and 26), four lysimeters with an increasing trend (17, 18, 20, and 25), and the remainder having no trend. In contrast, tungsten levels at I Range have remained steady over time for all lysimeters (Fig. 20). The average tungsten concentration by sampling event date appears to have decreased over time (86, 95, 63, and 42 mg/L) when all three ranges are averaged together or individually by range. For those lysimeters located in the trough, three exhibit increasing tungsten concentrations (17, 18, 29), one has a declining trend (1), and the remainder have no trend (Fig. 20).

Table 8. Lysimeter tungsten results (mg/L).

Lysimeter ID	Range	Location	Tip depth (cm bgs)	10/20/05	11/9/05	12/15/05	05/10/06	Mean
1	B	TR	78	85	48	55	28	54
2	B	TR	84	18	No water	24	15	19
3	B	TR	61	22	27	4	18	28
5	B	BP	69	60	102	No water	23	62
6	B	BP	107	312	253	No water	53	206
7	B	BP	91	No water	164	137	38	113
8	B	BP	112	314	290	256	No water	287
Bravo Range mean				135	148	103	29	110
9	I	TR	41	11	6.0	6.8	No water	7.8
10	I	TR	25	0.06	0.07	< 0.05	0.02	0.05
11	I	TR	71	0.09	< 0.05	< 0.05	0.02	0.06
12	I	BP	109	0.15	0.21	0.43	0.39	0.29
14	I	BP	36	0.24	0.27	0.24	0.60	0.33
India Range mean				2.3	1.6	2.5	0.26	1.7
17	C	TR	46	1.3	1.9	No water	3.0	2.1
18	C	TR	117	5.5	6.4	7.7	8.1	6.9
19	C	TR	109	5.4	8.3	11	8.5	8.2
20	C	TR	46	5.3	6.6	14	25	12
21	C	BP	165	260	400	No water	262	308
22	C	BP	119	116	206	96	44	115
24	C	BP	58	32	53	72	52	52
25	C	BP	163	139	79	110	261	147
26	C	BP	135	337	145	105	35	155
Charlie Range mean				100	101	59	78	90
15	I	Bckd	53	No water	< 0.05	No water	0.01	
27	C	Bckd	46	NI	NI	NI	0.17	
28	B	Bckd	46	NI	NI	NI	No water	
Background mean								
Overall mean				86	95	63	42	

Bckd Background
BP Bullet pocket
TR Trough
NI Not installed

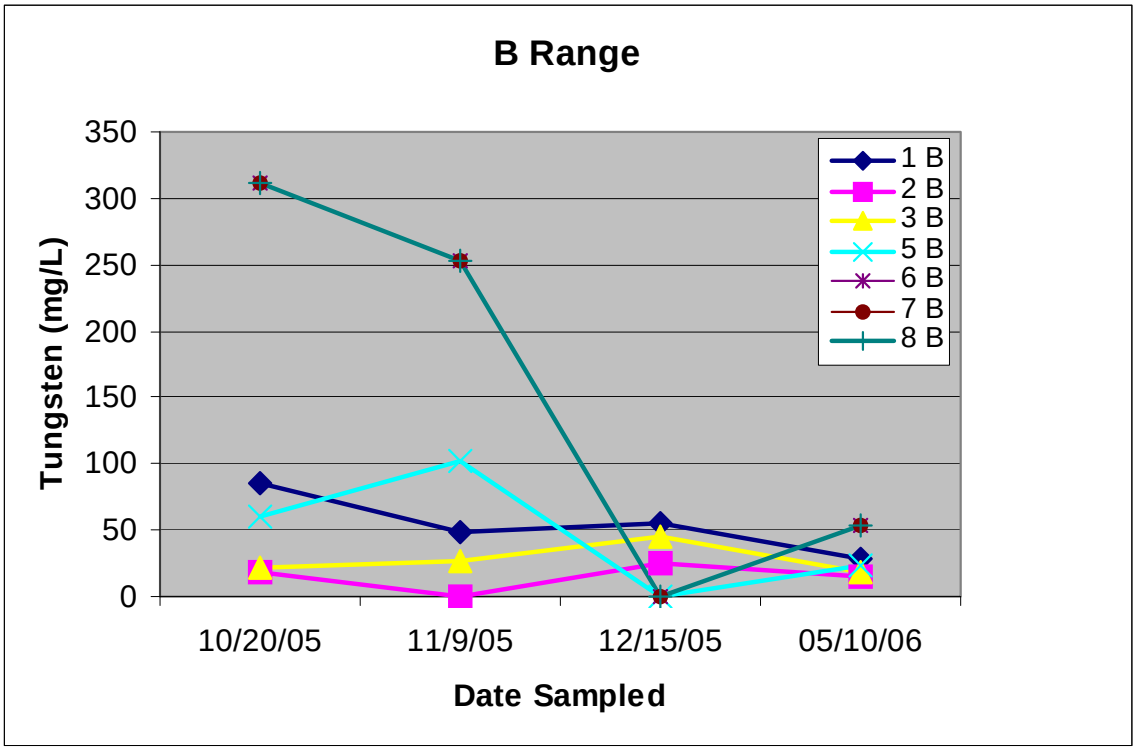

Figure 19. Tungsten pore-water trends for Bravo Range lysimeters.

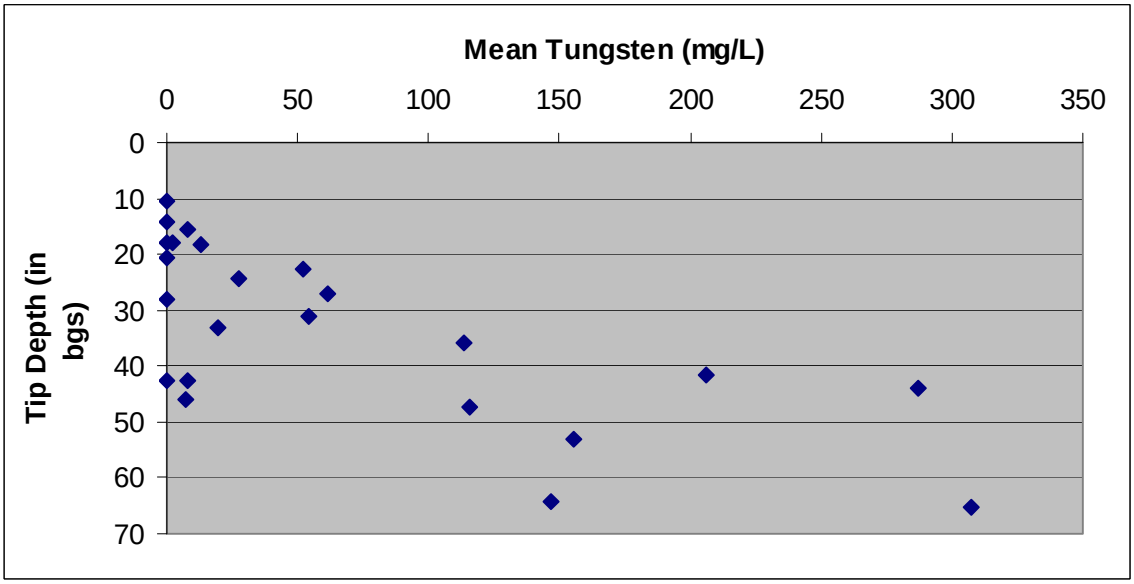

Figure 20. Lysimeter tip depth (in bgs) versus mean tungsten concentrations.

There appears to be an increasing tungsten concentration trend with depth for lysimeters at B and C Range (not shown), but not at I Range. Soil texture/composition is uniform with depth and does not explain the changes

of tungsten concentration with depth. Subsequent to this study three additional lysimeters have been installed at depth (1.5, 4.6, and 7.6 m bgs) at B Range to assess the distribution of tungsten with depth over the next year.

To assess whether the tungsten observed in the soil pore-water is in the aqueous phase or if natural organic and inorganic colloidal material plays a role in tungsten transport, several lysimeter samples were filtered through various sizes of Amicon hollow-fiber filters. Low-molecular-weight organic matter (or ligands) may form complexes with some metals species. Water from lysimeter MMR-21 collected during the 21 December 2005 sampling event was filtered. Six different filter sizes ranging from 0.45 µm to 3,000 mw were utilized. The results indicate no difference in tungsten concentration or other metals analyzed by filter size (Appendix F). Thus, the form of tungsten and other metals present in the soil pore-water is as a dissolved species. Although we have conducted experiments assessing the sorption of tungsten onto the silica flour pack material used around the porous cup, no tungsten adsorption observed, we have not assessed possible filtering of tungsten. If polytungstates are being formed, it is possible that their large molecular size may preclude them from migrating through the silica flour pack or possibly the porous cup. The fact that we observe ppm levels of tungsten in the lysimeters suggests any filtering affects due to the filter pack material or porous cup are minimal. However, we plan to further assess these possibilities in several future planned experiments.

Groundwater

In the discussion of groundwater results to follow, note that because of the very low concentrations of tungsten reported, the data will be presented in µg/L (ppb) as compared to units of mg/L (ppm) for the lysimeter samples. Water from four monitoring wells (MW-72S, MW-123S, MW-135M2, and MW-404S) sampled as part of the study (Fig. 21) in December 2005 and February, May, and June 2006 were analyzed for tungsten and other metals. The tungsten samples were initially analyzed with the ICP/AES and then with the ICP/MS by ERDC-EL. The ICP/AES limit for tungsten is 50 µg/L and 1 to 2 µg/L for the ICP/MS. Both filtered and unfiltered water samples were collected. A second independent laboratory, Northern Arizona University, utilized for confirmation analysis, used ICP/MS for analysis of samples. The ICP/AES reporting limit is 1 µg/L.

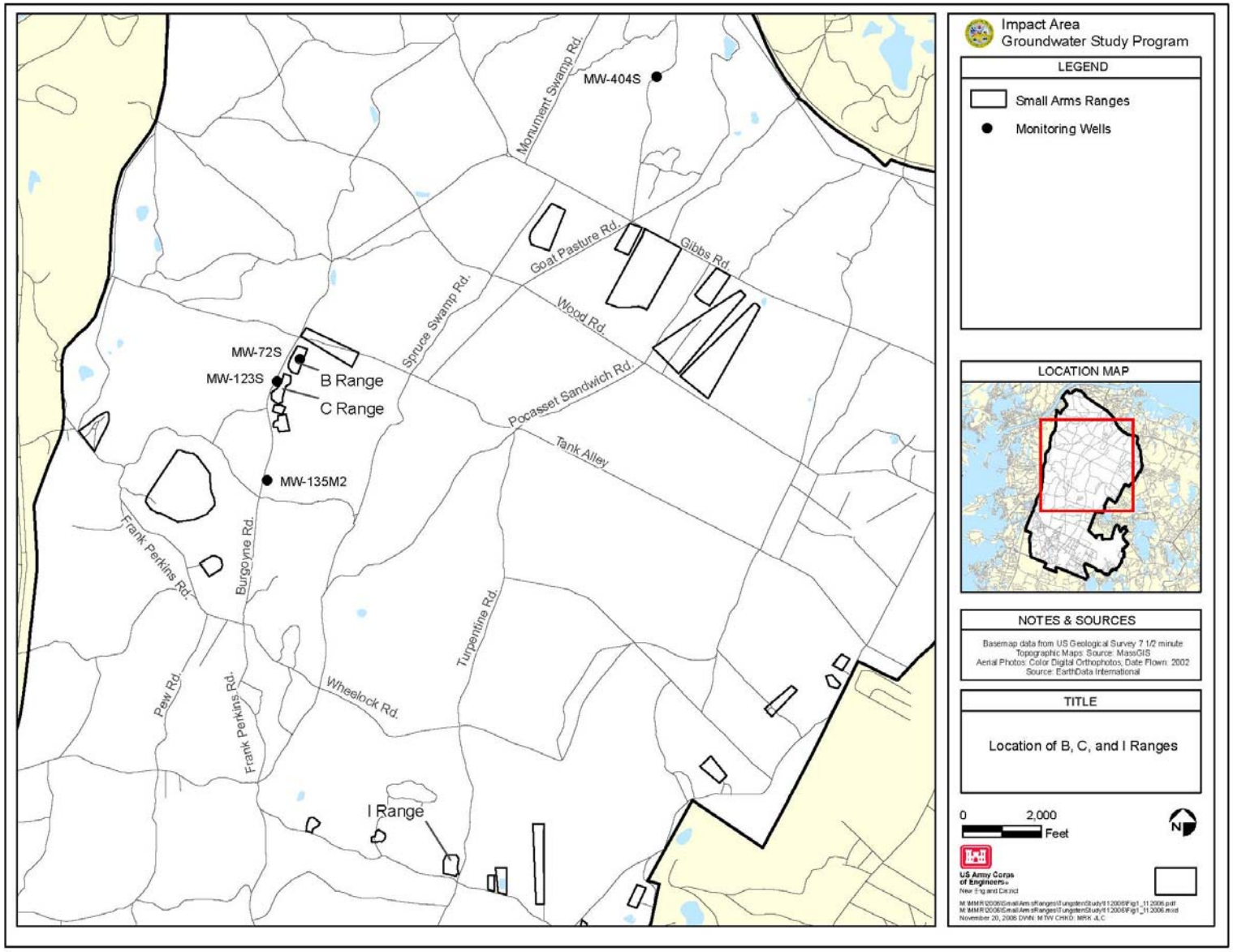

Figure 21. Location of monitoring wells sampled for the tungsten fate-and-transport study.

Monitoring well MW-72S is located on the B Range floor, approximately 10 m downgradient of the impact berm (Fig. 21). The well is screened at the water table from 63.6 to 53.6 ft ngvd. At MW-72S, the first two sampling events yielded tungsten concentrations of 15 and 25 µg/L, respectively. The third event yielded a tungsten concentration of 560 µg/L and the final sampling event yielded a value of 5.6 µg/L (Table 9). The tungsten results between the two independent laboratories, ERDC-EL and NAU, were in close agreement with each other.

Well MW-123S is located along Burgoyne Road northwest of C Range (Fig. 21). It is downgradient of the unbermed northern portion of C Range, which is not typically used for training. The well is screened at the water table from 59.3 to 49.2 ft ngvd. All four sampling events resulted in no reportable tungsten at the 1 µg/L PQL from the ERDC-EL laboratory (Table 9). Split samples sent to NAU indicated no tungsten above the PQL of 1 µg/L. However, NAU reports detectable tungsten in the second, third, and fourth sampling rounds above the MDL. In the first sampling round, tungsten was detected at a level of 0.02 µg/L with a MDL of 0.01 µg/L. During the third sampling event, tungsten was detected at a level of 0.16 µg/L with a corresponding MDL of 0.003 µg/L. During the fourth sampling event, tungsten was detected at a level of 0.19 µg/L and the corresponding MDL was 0.05 µg/L. Although these reported values are above the MDL, they are significantly below the PQL, placing considerable uncertainty in the actual values. Also, it has been recognized by both laboratories that there potentially is an instrument carry-over issue. Several experiments conducted with injection of spiked samples followed by the analysis of blank samples suggests tungsten is potentially being carried over between sample runs. Our preliminary research suggests tungsten can be carried over between sample runs up to a level of 0.4 µg/L. Therefore, any sample tungsten detections below the PQL of 1 µg/L are viewed as suspect for the time being, including those for MW-123S. Consequently, we are unable to confirm at this time whether tungsten is actually present at MW-123S. Further research is planned to assess the tungsten carry-over issue.

Background

To assess the background level of tungsten in water, lysimeters were installed and monitoring wells were sampled from locations presumed to be representative of native conditions. Lysimeter data suggest tungsten is present in some of the lysimeters installed at background locations, rang-

ing from non-detect to 170 µg/L (Table 8). However, the dataset for the background lysimeters is quite limited due to the lack of water. Given the proximity of the C Range background lysimeter to the firing range, it is possible that windblown tungsten particles have been deposited on the soil surface, thereby accounting for this elevated level. However, the background soil data do not support this possibility. To further assess the background issue, additional background lysimeters are planned as part of future work. Also, we plan to attempt to collect water samples for the existing lysimeters in coming months.

Two monitoring wells, MW-135M2 and MW-404S, were selected for sampling as background wells since, to the best of our knowledge, no activities involving the use of tungsten took place in the vicinity of these wells. Monitoring well MW-135M2 is located along Burgoyne Road between B and C Ranges and was selected to be representative of background conditions. The well is screened at the water table from –31.8 to –41.8 ft ngvd. All four sampling rounds resulted in no reportable tungsten at the 1 µg/L reporting limit from the ERDC-EL laboratory, nor any detection from NAU (Table 9).

Well MW-404S is located north of the B and C Ranges, northwest of the Demolition Area 2, and northeast of the E-3 Range. The well is screened at the water table from 49.9 to 39.9 ft ngvd. As was the case for MW-135M2, this well was representative of background conditions. All four sampling rounds resulted in no reportable tungsten at the 1 µg /L reporting limit from the ERDC-EL laboratory, nor any detection from NAU (Table 9). As discussed earlier, we are confident in the tungsten analytical results above the PQL of 1 ug/L.

However, to further ascertain the background level of tungsten in groundwater at Camp Edwards, further studies are planned. Additional work is planned to select a dozen background wells with the assistance of the IAGWSP for sampling to expand our background tungsten dataset.

Table 9. Groundwater tungsten results.

Well ID	Sample date	Water level (ft ngvd)	pH	Turbidity (NTU)	SC (uS/cm)	ORP (mv)	DO (mg/L)	W ERDC ICP/AES filtered (µg/L)	W ERDC ICP/AES unfilt. (µg/L)	W ERDC ICP/MS filtered (µg/L)	W ERDC ICP/MS unfilt. (µg/L)	W NAU ICP/MS unfilt. (µg/L)	W NAU ICP/MS unfilt. dup (µg/L)
MW-72S	12/15/05	58.29	5.31	2.0	138	260	10.1	< 50	< 50	15	12	15	15
MW-72S Dup	12/15/05	58.29	5.31	2.0	138	260	10.1	< 50	< 50	15	12	NS	NA
MW-72S	2/8/06	58.54	5.27	0.2	149	192	10.7	< 50	NS	22	NS	NS	25
MW-72S	5/10/06	59.57	6.88	1.0	164	95	11.6	NS	NS	530	516/560	520	NS
MW-72S	6/21/06	59.66	5.45	3.7	106	146	12.0	NS	NS	5	4	6	6
MW-72S Dup	6/21/06	59.66	5.45	3.7	106	146	12.0	NS	NS	5	5	NS	NS
MW-123S	6/21/06	59.40	5.67	4.1	80	131	13.1	NS	NS	< 1	< 1	< 1	< 1
MW-123S	12/27/05	57.87	5.54	0.2	68	264	11.7	< 50	< 50	< 1	< 1	< 1	< 1
MW-123S Dup	12/27/05	57.87	5.54	0.2	68	264	11.7	< 50	< 50	< 1	< 1	NA	NA
MW-123S	2/8/06	58.27	5.50	0.5	71	192	11.3	< 50	< 50	< 2	NS	NS	< 1
MW-123S	5/10/06	59.30	5.58	0.9	71	151	12.7	NS	NS	NS	< 1	< 1	NS
MW-135M2	12/27/05	60.59	5.98	0.0	43	247	12.9	< 50	< 50	< 1	< 1	< 1	< 1
MW-135M2 Dup	12/27/05	60.59	5.98	0.0	43	247	12.9	< 50	< 50	< 1	< 1	NA	NA
MW-135M2	2/8/06	60.90	5.81	0.0	40	9.2	13.0	< 50	NS	< 2	NS	NS	< 1
MW-135M2	5/10/06	61.89	5.87	0.4	50	229	10.4	NS	NS	NS	< 1	< 1	NS
MW-135M2	6/21/06	62.16	5.94	4.6	45	165	12.1	NS	NS	< 1	< 1	< 1	< 1
MW-404S	12/22/05	48.84	5.85	117	67	204	11.9	< 50	< 50	< 1	< 1	< 1	< 1
MW-404S Dup	12/22/05	48.84	5.85	117	67	204	11.9	< 50	< 50	< 1	< 1	NA	NA
MW-404S	2/8/06	49.00	5.41	0.0	60	64	12.9	< 50	NS	< 2	NS	NS	< 1
MW-404S	5/10/06	50.12	5.88	0.7	72	243	6.4	NS	NS	NS	< 1	< 1	NS
MW-404S	6/21/06	50.21	5.81	7.2	71	160	11.4	NS	NS	< 1	< 1	< 1	< 1

DO Dissolved oxygen
Dup Duplicate
ERDC Engineer Research and Development Center
NA Not applicable
NS Not sampled
NAU Northern Arizona University
ngvd National geodetic vertical datum
ORP Oxidation reduction potential
SC Specific conductance
Unfilt Unfiltered
W Tungsten

Laboratory Tests

Laboratory tests were conducted to understand 1) whether the current soil digestion methods for metals were appropriate for recovery of tungsten; 2) the physical characteristics of the tungsten in the bullets and in the soils and 3) how quickly tungsten dissolves.

Digestion Techniques

Previous work suggested that the standard digestion method, EPA Method 3051, resulted in poor recoveries of tungsten, i.e., in the 20- to 30-percent range (Larson et al. 2006). Therefore, a number of tests were conducted to assess various sample preparation steps and their contribution to the total measurement error. Details of all tests are provided in Appendix G.

Characteristics of Tungsten and Camp Edwards Soil

X-Ray Diffraction

Soil samples from Camp Edwards were analyzed with XRD to determine the mineralogy of the soil. The XRD results indicate that quartz is the main mineral, followed by feldspar and mica (see Appendix C for details).

Scanning Electron Microscope

The tungsten/nylon slug has submicron to approximately 50-µm tungsten particles embedded in nylon. Overall, the tungsten is uniformly distributed except in a few areas containing little tungsten; these appear dark on the backscattered image. The tungsten grains themselves are faceted and reflect the metal's cubic crystal structure (see Appendix D for details).

Solubility Tests

Since tungsten particles are present in the surface soil, we wanted to measure how quickly the tungsten is dissolved by water. We addressed this question using batch desorption experiments of the soil and dissolution tests of individual tungsten particles.

Batch Tests

Bottom line: 1) Fines stick to rocks and penetrators and need washing off, 2) penetrators have significant percentage of tungsten in their composi-

tion, 3) copper jackets, although deformed, retain a significant fraction of tungsten and do not grind well or digest well.

To find out how tungsten desorbs from military firing range soil, we conducted desorption experiments. A soil, MMRBMB023S2, with a tungsten concentration of 1,420 mg/kg, was used for the experiments. Water was added to the soil and shaken, and small volumes were removed at predetermined times. The water samples were analyzed for tungsten with an ICP-AES. These tests suggest desorption of tungsten is logarithmic and increases with time. After two days of shaking the soil in the solution, approximately 20 to 30 percent of the tungsten in the soil leached into solution (Fig. 22). Because the concentration in solution did not reach a plateau in any of the tests, tungsten was still being dissolved from the soil. The release rate of tungsten may be controlled by how quickly the metal oxidizes or the solubility of the tungsten oxides. As expected, the pH of the extraction solution influences desorption behavior of the tungsten. Acidified samples had tungsten concentrations that were consistently lower by a factor of four over all time intervals. The results from these batch tests did not yield an ideal method for assessing desorption and further work is being conducted.

To assess whether tungsten in solution sorbed onto clean MMR soils, we added approximately 10 g of clean Camp Edwards soil to 100 mL of deionized water containing 0.1 to 1.5 mg/L tungstate. The sample was shaken for 24 hrs and then the water was analyzed. Results indicate no limited tungsten sorption by the Camp Edwards soil. We would like to repeat these tests using clay-rich soils.

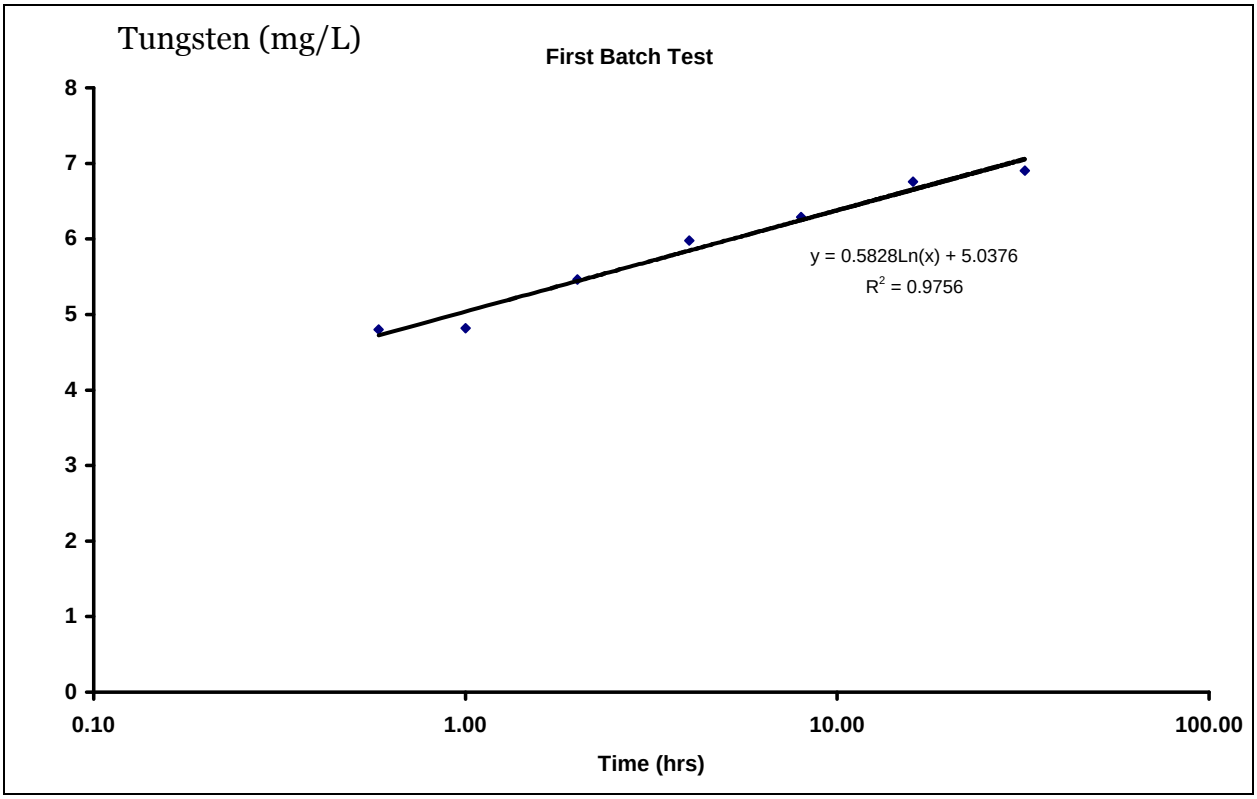

Figure 22. Desorption batch experiment assessing the relationship between tungsten soil concentrations and water tungsten concentrations.

Dissolution Experiments

We dripped deionized water on a tungsten/nylon bullet fragment at a rate of 0.51 mL/hr (approximately 30-µL drops at a rate of 20 drops/hr). The equivalent rainfall or steady-slow rate is 5.5 mm/hr. The water flowed through the glass frit supporting the fragment into a pre-cleaned scintillation vial. The vial was changed each day (12 mL water collected daily) and the experiment ran for 30 days. Seven of the water samples, those for days 1, 5, 10, 15, 20, 25, and 30, were analyzed for tungsten. The results show tungsten from the tungsten/nylon bullet is readily soluble (Table 10). The concentrations for "instant" dissolution are between 4 and 12 mg/L. This range is similar to that observed for the initial tungsten concentrations in the batch tests, again indicating that the tungsten comes from individual tungsten particles, rather than tungsten adsorbed to soil clays. The concentration of tungsten in the samples is uniform through time. We hypothesize that amount of tungsten that dissolves into each water droplet depends on the contact time between the tungsten and the water and the amount of water passing by the tungsten particle. In this case, the tungsten particle is a large reservoir and the water dripped on it has not begun

to deplete the amount of tungsten present. The concentration in the water reflects the fact that each water droplet is able to dissolve a given amount of tungsten in the time it is in contact with the particle.

Table 10. Concentration of tungsten in water dripped onto tungsten/nylon bullet.

Time (days)	Tungsten (mg/L)
1	7.3
1 duplicate	7.4
5	6.5
10	8.9
15	9.7
20	3.9
25	8.3
30	4.3

8 DISCUSSION

Distribution of Tungsten

Tungsten is present in the soils at these small arms ranges. The spatial distribution pattern shows the highest tungsten levels in the bullet pockets. Tungsten levels are also high between the bullet pockets and in the trough at the base of the berm. Field observations suggest that the soil and metal fragments are eroded from the bullet pockets and transported to the trough. Tungsten levels behind the primary berm and on the upper berm face are lower than the rest of the berm but higher than those observed at the targets. Concentrations on the range floor are highest close to the target. Ballistic issues, in-flight instability, likely contributed to the tungsten observed on the range floor. The lowest surface soil tungsten concentrations are found at the firing point, where the concentrations are similar to background levels. The observed distribution of tungsten in the soils is consistent with the conceptual model.

Much lower soil tungsten levels were found at I Range as compared to B and C Ranges. As shown in Table 1, the number of tungsten projectiles fired at I Range is an order of magnitude less than what was fired at B and C Ranges. Also, tungsten projectiles were not fired at I Range in 2005, so when we started this study, the range had been unused for six months. These two factors—lower level of use and recent inactivity—produced lower soil tungsten levels at I Range. In contrast, a much greater number of bullets were fired at B and C Range, which have corresponding higher soil and soil pore-water concentrations. The copper slugs of unknown caliber found on I Range that appear to have a significant amount of tungsten may not be reflected in the soil results, since the data reported are for the < 2-mm size fraction. Recall that the copper slugs are retained by the 2-mm sieve.

The consistently lower tungsten concentrations in the lysimeters at I Range suggest that much of the tungsten has migrated below the depth of the lysimeters. It also seems that the tungsten present in or on the copper slugs is having minimal impact on the pore-water. This could be due to the low number of slugs resulting in a limited tungsten mass going into solution, or this material is relatively insoluble. In contrast, the lysimeters at B and C Ranges have higher tungsten levels than I Range; this is consistent

with the higher soil concentration and greater number of tungsten/nylon rounds fired. However, the lysimeters at I Range, as well as those at B and C Range, appear to have stabilized to a tungsten level near 50 mg/L for the last sampling event (Fig. 19, 23, and 24).

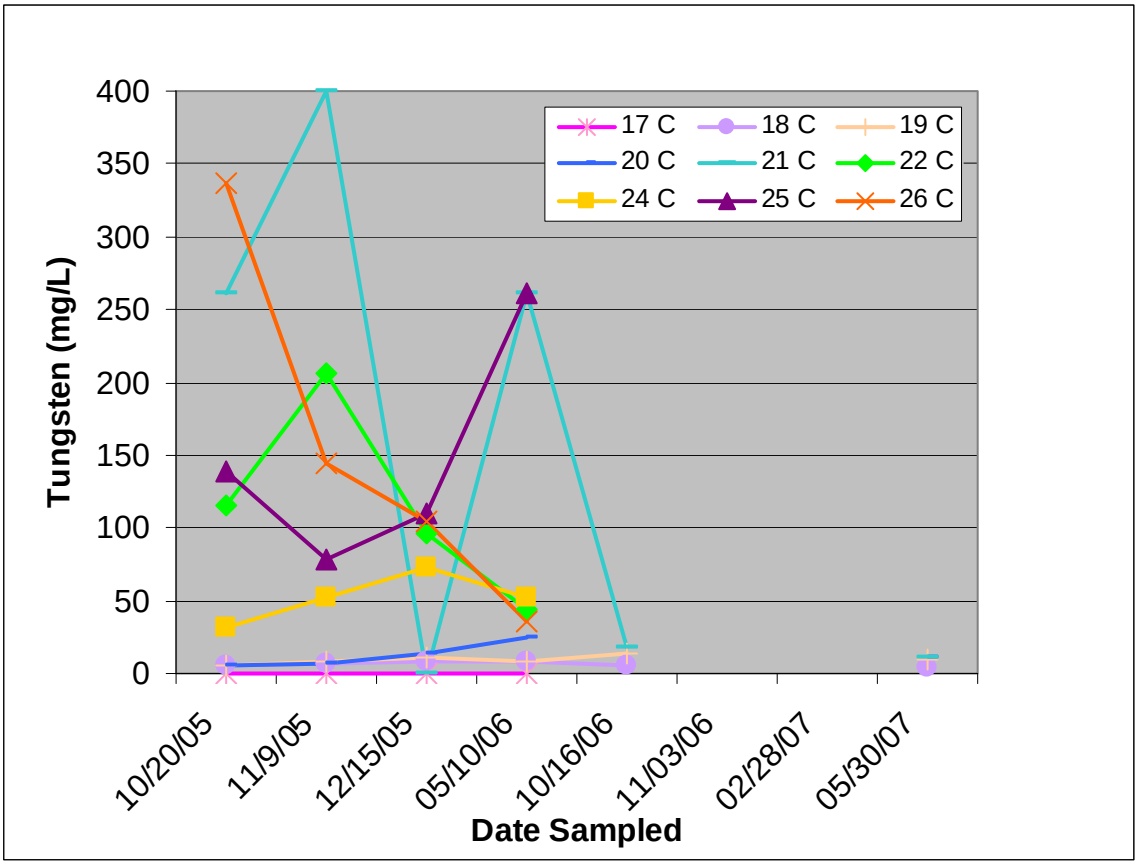

Figure 23. Tungsten pore-water trends for Charlie Range lysimeters.

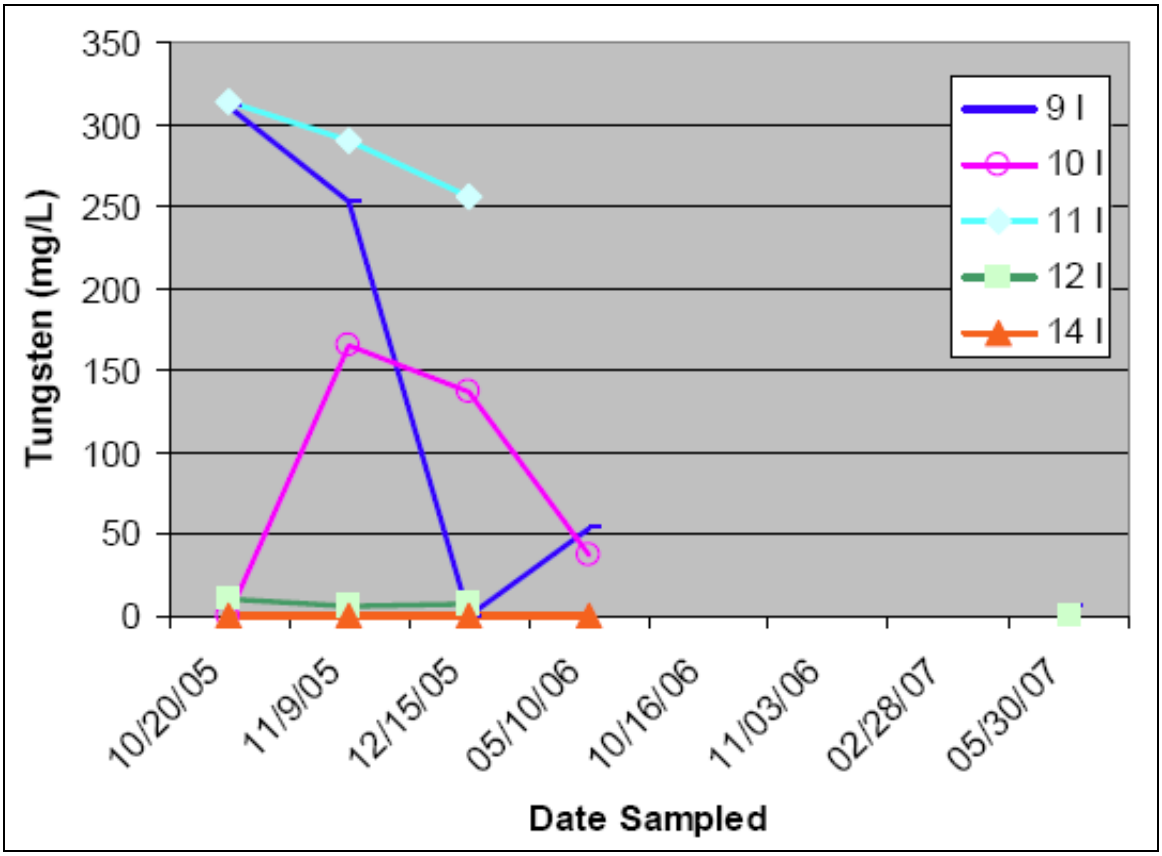

Figure 24. Tungsten pore-water trends for India Range lysimeters.

Fate and Transport of Tungsten

The lysimeter results indicate that tungsten is dissolved in water and transported during precipitation events. We think that the tungsten metal is corroding and producing soluble tungsten oxides. The field data, supported by laboratory experiments, indicate tungsten oxide may have a solubility limit in excess of 600 mg/L. The tungsten present in the unsaturated zone is in solution rather than particulate form since tungsten concentration was independent of filter size down to 5,000 Daltons. Groundwater sample MW-72S, collected on 24 May 2006, was filtered through 5,000 and 50,000 Daltons and 0.45-µm filters. The concentration after filtering was the same for the three filter sizes, suggesting that the tungsten was dissolved. Filtering does not provide information on the form of the tungsten as polytungstates cannot be ruled out. They have a wide variety of molecular masses and small polytungstate chains (less than 10 or 12 tungsten atoms) would likely pass through a 5,000-Dalton filter. Although the species of tungsten in the water migrating through the unsaturated zone is unknown, we think it is a tungstate anion. HPLC-ICP/MS analysis of the water sample showed a single peak with similar retention time to

the tungstate standard. The absence of tailing of the sample peak indicates that a monomeric form of tungstate is present.

The groundwater data from MW-72S (a single well sampled four times over a 10-month period) located on B Range indicates tungsten has migrated through the unsaturated zone, approximately 36 m, and reached the water table. At MW-72S, the concentration of tungsten fluctuated over two orders of magnitude. There are several potential explanations for the high tungsten concentration reported on 24 May.

Analytical error can be ruled out as a potential cause of the spike in tungsten because a duplicate sample was collected with similar results. Also, the original and duplicate samples were sent to a second independent laboratory for analysis and the results were confirmed. Sampling error also can be ruled out because there are no other wells present at the site with tungsten. Given the low tungsten soil concentrations in the soil on the range floor near MW-72S, transport of tungsten from the surface near the well is not likely, nor is short circuiting along the well screen. Field observations and field logs during construction note no well abnormalities.

Preceding the 24 May sampling event was a two-week period of intense and heavy rain, upward of 0.3 m. One hypothesis is that the heavy rainfall dissolved tungsten present on the soil surface and the water infiltrated to the water table prior to the sampling event. Given that the monitoring well is located 10 m from the impact berm face and horizontal groundwater flow is roughly 0.3 m/day, this possibility seems unlikely. Flow in the unsaturated zone is likely vertical with very little horizontal dispersion due to the high permeability of the soil, i.e., the lithology is a coarse sand and gravel.

The second hypothesis is that tungsten is already present at depth in the unsaturated zone with the leading front of a high concentration zone just above the water table. However, again there is insufficient time to transport the tungsten from the impact berm location to MW-72S.

Another possibility is that the high concentration front of tungsten was already present in groundwater upgradient of MW-72S and coincidentally reached the well after the heavy precipitation events.

The final possibility is that a narrow zone of high concentration of tungsten exists in the aquifer. This zone of elevated tungsten could either be present or below the MW-72S well screen. The well screen at MW-72S spans a 3-m interval near the water table. Typically, it is assumed that if a pump is placed within the well screen area and low-flow sampling techniques are used, an equal amount of water comes from the entire length of well screen. If the majority of the water captured by the well screen had little to no tungsten, then the greater volume of unimpacted water could be diluting the smaller volume of water with high concentrations of tungsten. This could explain the low tungsten concentrations observed during the first, second, and fourth sampling events. During the third sampling event, the heavy precipitation could have resulted in short but rapid rise in water levels followed by a decline. This would have resulted in mixing of water at the water table, which could have resulted in the higher tungsten concentration observed.

A second phase of work has been conducted whereby drive-points were installed with the intent of mapping out the extent of tungsten in the aquifer. Preliminary results from the drive-point wells indicated no tungsten. Two additional monitoring wells at B Range and one additional well at C Range are planned to help determine the extent of tungsten in the aquifer.

Although the ERDC-EL and NAU results indicate tungsten is not above the reporting limit at MW-123S, NAU was able to detect tungsten above the detection limit but below the reporting limit. Well MW-123 is located downgradient of the northern unbermed portion of C Range. Tungsten rounds were not fired on the unbermed portion of the range but rather on the bermed portion to the south. The orientation of the groundwater flow paths would seem to preclude tungsten coming from the southern portion of C Range and affecting MW-123S. Lateral dispersion of groundwater is minimal at Camp Edwards based on observation of contaminants at Demolition Area 1. The planned collection of drive-point samples at B Range and the installation of additional monitoring wells at C Range should shed some light on the source of tungsten. This information is planned to be collected as part of a second phase Tungsten Fate-and-Transport Study at Camp Edwards.

Although longitudinal dispersion of tungsten coming from C Range cannot be ruled out, it is equally plausible that the very low concentration of tungsten reported by NAU is suggestive of background conditions. However,

both background wells (MW-135M2 and MW-404S) had no detectable tungsten present. Given the small population size of the background well dataset, background conditions may include detectable tungsten. The background issue will be explored as part of the second phase Tungsten Fate-and-Transport Study at Camp Edwards by sampling up to a dozen background wells.

Mass Balance

One of the objectives developed by USAEC for this study was to establish a mass balance of tungsten usage relative to mass loading in the environment. Any unaccounted mass then could be assumed lost as a result of migration. Two technical issues identified during the course of the study made a mass balance assessment impractical. Our analysis of data from B Range suggests that approximately 5% of the tungsten mass can be accounted for in the < 2-mm surface soil fraction. However, there is significant uncertainty with the mass of tungsten in the > 2-mm fraction. Analysis of a few samples yielded wide variability in tungsten mass for the larger soil fraction. Unfortunately, it is not practical to conduct large volume acid digestions on hundreds of samples. Consequently, a reliable method has not been determined to quantify the amount of tungsten on the larger size fraction. In June 2006, the MAARNG removed soil from the berms, making future mass balance studies not possible.

The second issue involves quantifying the mass of tungsten in the subsurface soil samples collected at depths > 5 cm. As reported earlier, a number of increments across a given decision unit are necessary to obtain a representative soil sample. Multi-increment samples can be easily and quickly obtained from the surface soil. Unfortunately, the collection of subsurface soil samples is a time-consuming process. In the original work plan, the goal was to collect eight increments at a given depth within a decision unit, knowing that that this would likely be fewer increments than necessary. Once in the field, it quickly became apparent that collection of multi-increment subsurface samples was going to require significantly more time than planned. Consequently, only four increments were collected per depth per decision unit. Also, only four multi-increment samples were collected per range. Data from these few decision units were going to be extrapolated across the berm. Our initial calculations show a very large uncertainty in the mass in the subsurface soil, ignoring the soil size issue. Therefore, it is not possible to determine the mass of tungsten in the subsurface soil without incurring a large degree of error.

The two sources of error, underestimation of mass in the > 2-mm fraction and subsurface soil, are so large that no meaningful mass balance could be performed. It is our assessment that a meaningful mass estimate is beyond the scope of this project and could require all of the > 2-mm samples to be completely digested and many additional subsurface soil samples collected. Even then, it is not clear that a mass balance is possible due to other variables, such as the number of rounds missing the berm.

X-Ray Fluorescence Versus Inductively Coupled Plasma

As stated in Appendix D, the tungsten soil values reported with the XRF units were not statistically different from those measured with ICP. XRF is a valuable tool that can be used to assist in the collection of metals data, allowing for “real time” analysis.

9 CONCLUSIONS

Tungsten is present in the surface soils of three small arms ranges at Camp Edwards. The level of tungsten in subsurface soils (generally less than 1 mg/kg) is significantly less than in surface soils and decreases with depth. Soil pore-water in the unsaturated zone beneath the bullet pockets and trough areas has tungsten at levels that appear to correspond to the surface soil concentrations and range usage. Tungsten is present in one monitoring well located downgradient of the berm on B Range. Field and laboratory results indicate that the tungsten from the tungsten/nylon bullets is rapidly dissolved with solubility levels approaching several hundred mg/L. As tungsten metal is insoluble, we hypothesize that the small particles of tungsten in the bullets have oxidized and that we are dissolving tungsten oxides. Relatively high levels of tungsten (up to 400 mg/L) in the unsaturated zone pore-water at depths up to 65 cm indicate tungsten is mobile through these sandy, acidic, aerobic soils. The presence of tungsten in groundwater at Camp Edwards indicates relatively rapid migration through the unsaturated zone. Results from nanopore sieving tests and HPLC GC tests suggest that the mobile form of tungsten is a tungstate anion; however, we cannot yet rule out a polytungstate form. Rapid migration indicates that the tungsten carried in the pore-water is not retarded by sorption, possibly because the clay content of Camp Edwards soils is low. Groundwater impacts are possible for those installations with shallow depth to groundwater and sandy soils. Surface water impacts are possible in temperate environments where surface water drains off the small arms range. Migration of tungsten from small arms ranges can be expected from sites with significant amounts of precipitation, such as the eastern United States or coastal regions of the western United States, with delayed impacts in arid environments.

10 RECOMMENDATIONS

As outlined in the Final Proposal Addressing Tungsten Fate and Transport at Camp Edwards, dated 25 May 2006, additional studies are recommended to assess the fate and transport of tungsten at Camp Edwards. This additional work has been funded and will be focused on mapping the extent of tungsten in groundwater at B Range, experimental work quantifying the dissolution rate and adsorption/desorption kinetics of tungsten on Camp Edwards soil, unsaturated and saturated zone modeling to assess the transport rates, and tungsten speciation studies to identify the aqueous form present in the environment.

For the dissolution experiments, the next step is to standardize the experimental methods and run a series of tests using different soil:solution ratios. A test using aqueous sodium tungstate standard solution also is necessary to test whether tungsten is lost during sample preparation.

One activity planned as part of the second phase of the tungsten study at Camp Edwards is to more rigorously establish the background level of tungsten in the soil pore-water and groundwater. We plan to install several additional lysimeters in remote locations to ascertain the background level of tungsten. We also plan to sample up to a dozen additional background monitoring wells (to be identified in cooperation with the IAGWSP) to determine the natural background level of tungsten in the environment.

11 REFERENCES

AMEC. 2001a. Draft IAGWSP Technical Team Memorandum, Central Impact Area Soil Report, TM 01-13. Massachusetts Military Reservation, Cape Cod, Massachusetts. MMR-3915. July 2001. AMEC Earth and Environmental, Inc., Westford, MA.

AMEC. 2001b. Draft Central Impact Area Soil Focused Investigation Report, Massachusetts Military Reservation, Cape Cod, Massachusetts. MMR-9210. July 2001. AMEC Earth and Environmental, Inc., Westford, MA.

Dermatas, D., W. Braida, C. Christodoulatos, N. Strigul, N. Panikov, M. Los, and S. Larson. 2004. Solubility, sorption, and soil respiration effects of tungsten and tungsten alloys. *Environmental Forensics*. **5**:5–13.

Groen, J.C. 1999. Tungsten. In *Encyclopedia of Geochemistry*, Marshall, C.P., and Fairbridge, R.A. (Ed.), pp. 639–644. Boston: Kluwer Academic Publishers.

Gustafsson, J.P. 2003. Modeling molybdate and tungstate adsorption to ferrihydrite. *Chemical Geology*, **200**:105–115.

Hartung, M. 1991. Tungsten. In *Metals and Their Compounds in the Environment*, E. Merian (Ed.), pp. 1269–1272. Weinheim, Germany: VCH.

Jenkins, T.F., C.L. Grant, M.E. Walsh, P.G. Thorne, S. Thiboutot, G. Amplemann, and T.A. Ranney. 1999. Coping with spatial heterogeneity effects on sampling and analysis at an HMX-contaminated antitank firing range. *Field Analytical Chemistry and Technology*, **3**(1): 19–28.

Langard, S. 2001. Tungsten. In *Patty's Toxicology*, E. Bingham, B. Cohrssen, and C.H. Powell (Ed.), pp. 106–128. New York: John Wiley.

Larson, S., M. Beverely, M. Thompson, K. Powell, G. Williams, E. Wakeley, and C. Griggs. 2006. Migration of Tungsten and Other Heavy Metals from Simulated Small Arms Firing Berm Soils. Report prepared for the Army Environmental Policy Institute by US Army Corps of Engineers, Engineer Research and Development Center, Environmental Laboratory, Vicksburg, MS.

Lassner, E., G. Austria, and W.-D. Schubert. 1996. Tungsten, tungsten alloys, and tungsten compounds. In *Ullmann's Encyclopedia of Industrial Chemistry*, B. Elvers and S. Hawkins (Ed.), pp. A27:229–267. Weinheim, Germany.

MIDAS. 2005. Munition Information and Data Acquisition System. US Army.

Petrunic, B.M., and T.A. Al. 2005. Mineral/water interactions in tailings from a tungsten mine, Mount Pleasant, New Brunswick. *Geochimica et Cosmochimica Acta*, **69**(10):2469–2483.

Ramsey, C.A., and J. Suggs. 2001. Improving laboratory performance through scientific subsampling techniques. *Environmental Testing and Analysis*. Mar/Apr:13–16.

Rasemann, W. 2000. Industrial waste dumps, sampling and analysis. In *Encyclopedia of Analytical Chemistry*, R. Meyers (Ed.). Wiley.

Seiler, R.L., K.G. Stollenwerk, and J.R. Garbarino. 2005. Factors controlling tungsten concentrations in groundwater, Larson Desert, Nevada. *Applied Geochemistry*. **20**:423–441.

USEPA. 1996. Test Methods for Evaluating Solid Wastes, SW-846. United States Environmental Protection Agency, Office of Solid Waste and Emergency Response. Washington, DC.

USEPA. 2000. Guideline Establishing Test Procedures for the Analysis of Pollutants. Part 136, Appendix B. Definition and Procedure for the Determination of the Method Detection Limit: Revision 1.11. US Code of Federal Regulations, 40.

Walsh, M.E. 2004. Field-portable X-ray fluorescence (FP-XRF) determination of metals in post-blast ordnance residues. ERDC/CRREL TR-04-5, US Army Corps of Engineers, Engineer Research and Development Center, Cold Regions Research and Engineering Laboratory, Hanover, NH.

APPENDIX A: LYSIMETER INSTALLATION AND SAMPLING DETAILS

Tension lysimeters were installed at all the ranges where soil samples were collected for tungsten (Table A-1). The 0.5-bar, high-flow pressure-vacuum lysimeter, Model 1920F1/K1, from Soil Moisture Equipment Corporation of Santa Barbara, California, was used. Eight lysimeters were installed at B Range (Fig. A-1), 11 at C Range (Fig. A-2), and 6 at I Range (Fig. A-3). The lysimeters were installed in the trough area, beneath bullet pockets, and in background locations. One background lysimeter was installed at each range.

Pressure-vacuum lysimeters consist of two lines: a pressure-vacuum line used to apply a vacuum to draw the pore-water sample into the porous cup and a discharge line used for sample collection. These tubes are threaded from the top of the lysimeter body tube to the ground surface within a protective casing. To collect pore-water, air is removed from the lysimeter with the vacuum tube. Once water has accumulated in the porous cup, the vacuum is released (if remaining), the lysimeter is pressurized, and the water is forced from the lysimeter body up through the discharge line.

Prior to going into the field, all of the lysimeters were soaked and pressure checked in the laboratory. We found a significant number of lysimeters to be cracked or have leaks and these had to be replaced. Also, several lysimeters broke during installation.

Once in the field, the lysimeters were soaked for two hours before being installed to ensure saturation of the porous cup. During the soaking process, each lysimeter was pressure-checked a second time to ensure that the discharge and pressure-vacuum lines were working properly.

Table A-1. Lysimeter construction information.

Lysimeter	Range	Target location	Monitoring location	Total boring depth (cm)	Boring angle (°)	True tip depth (cm bgs)	Boring orientation	Direction (degrees)	Installation date
1	B	T29	TR	91	60	79	SW	220	7/14/05
2	B	T33	TR	119	45	84	SW	220	7/14/05
3	B	T33	TR	66	70	61	NE	40	7/14/05
4	B	T29	TR						Not Installed
5	B	T26	BP	119	35	69	SW	200	9/7/05
6	B	T26	BP	150	45	107	SW	205	9/7/05
7	B	T24	BP	119	50	91	SW	220	9/7/05
8	B	T23	BP	142	52	112	SW	220	9/7/05
9	I	T6	TR	46	60	41	W	210	9/8/05
10	I	T1	TR	46	35	25	W	230	9/8/05
11	I	T10	BP	142	30	71	SE	130	9/8/05
12	I	T10	BP	132	55	109	SW	190	9/8/05
13	I	T12	BP						Not Installed
14	I	T11	BP	56	40	36	S	210	9/8/05
15	I	Bckd	BK	69	50	53	W	240	9/8/05
16	C	T48	TR	70	50	53	W	220	12/15/05
17	C	T48	TR	51	50	38	S	180	9/7/05
18	C	T48	TR	152	50	117	N	25	9/7/05
19	C	T35	TR	132	55	109	NE	30	9/7/05
20	C	T36	TR	61	50	46	NE	25	9/7/05
21	C	T34	BP	213	51	165	SW	220	9/7/05
22	C	T34	BP	147	55	119	NE	25	9/7/05
23	C	T34	BP						Not Installed
24	C	T43	BP	66	60	58	SW	220	9/7/05
25	C	T43	BP	213	50	163	SW	220	9/7/05
26	C	T43	BP	157	59	135	N	20	9/7/05
27	C	Bckd	Bckd	51	50	38	W	270	12/15/05
28	B	Bckd	Bckd	51	50	38	W	270	12/15/05

Bckd Background
BP Bullet pocket
TR Trough

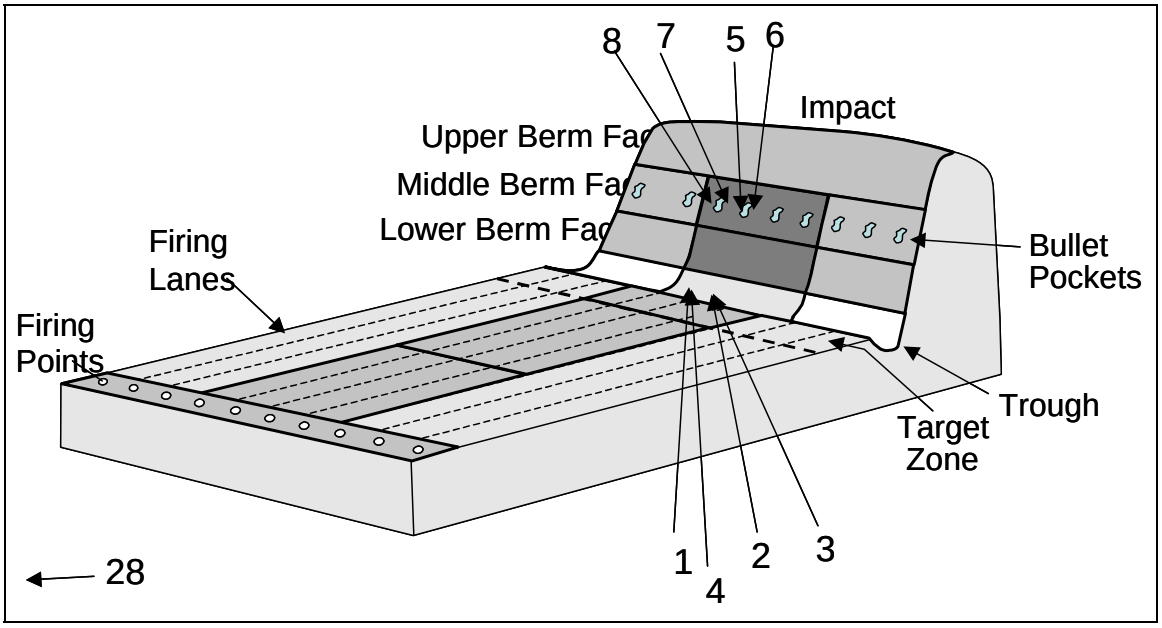

Figure A-1. Location of lysimeters installed at Bravo Range.

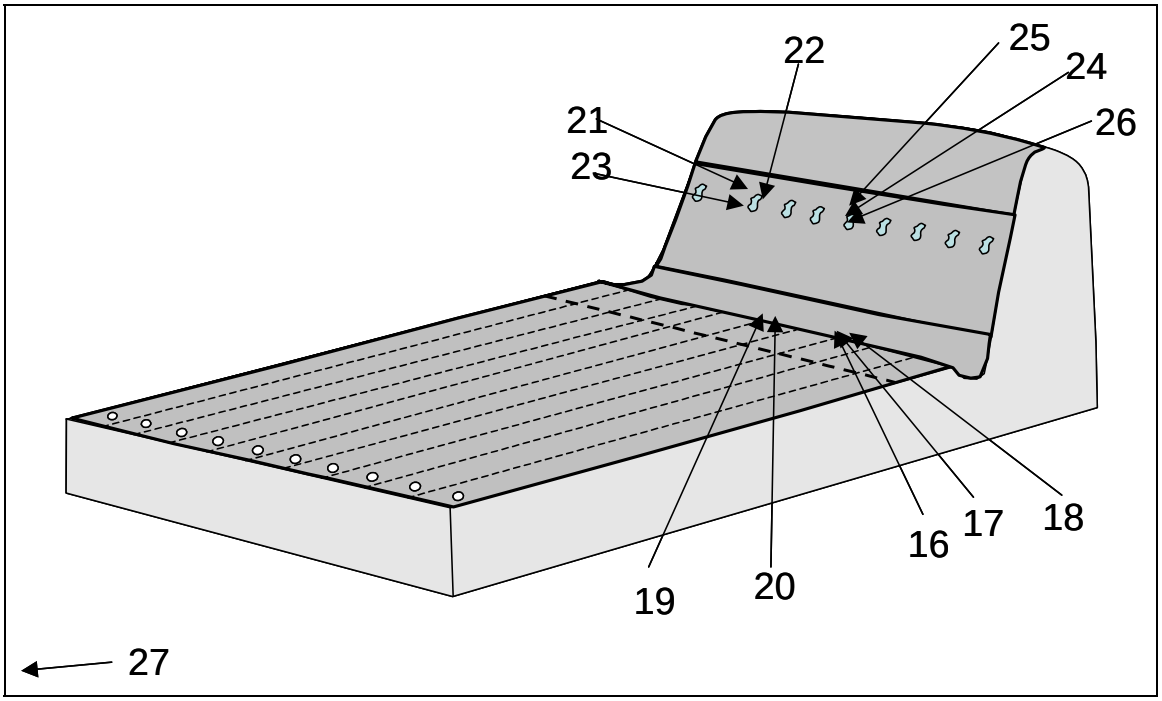

Figure A-2. Location of lysimeters installed at Charlie Range.

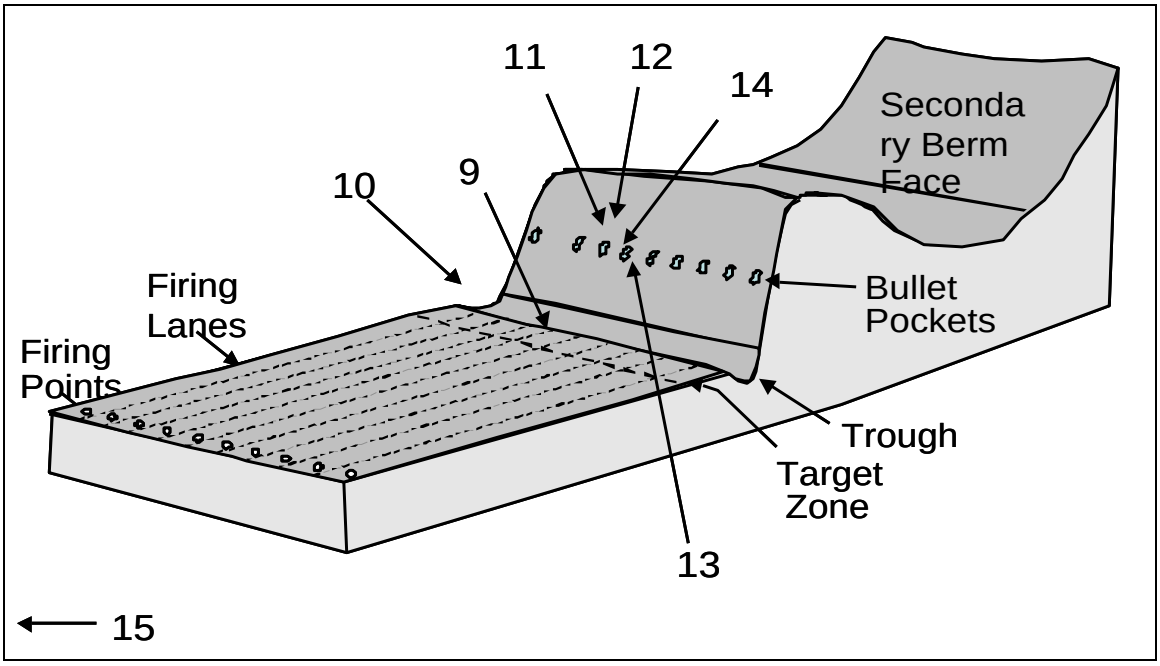

Figure A-3. Location of lysimeters installed at India Range.

Using a hand auger, 10-cm-outer-diameter boreholes were made at an angle of approximately 22° to 70° from the horizontal. A power auger did not work well in this gravelly soil. Polyvinyl chloride (PVC) pipe with a 10-cm outer diameter was inserted into each boring to keep the angled borehole open. The boreholes were angled in order to place the tip of the lysimeter below undisturbed soil, to ensure that the pore-water samples reflect flow through undisturbed soil.

Schedule 40 PVC two-inch riser sections were attached to extend the lysimeter assembly to the desired sampling depth. Tubing for the discharge and vacuum-pressure lines were attached to the lysimeter and fed through the PVC to the surface (Fig. A-4). After installing the lysimeter, the outer PVC casing was removed.

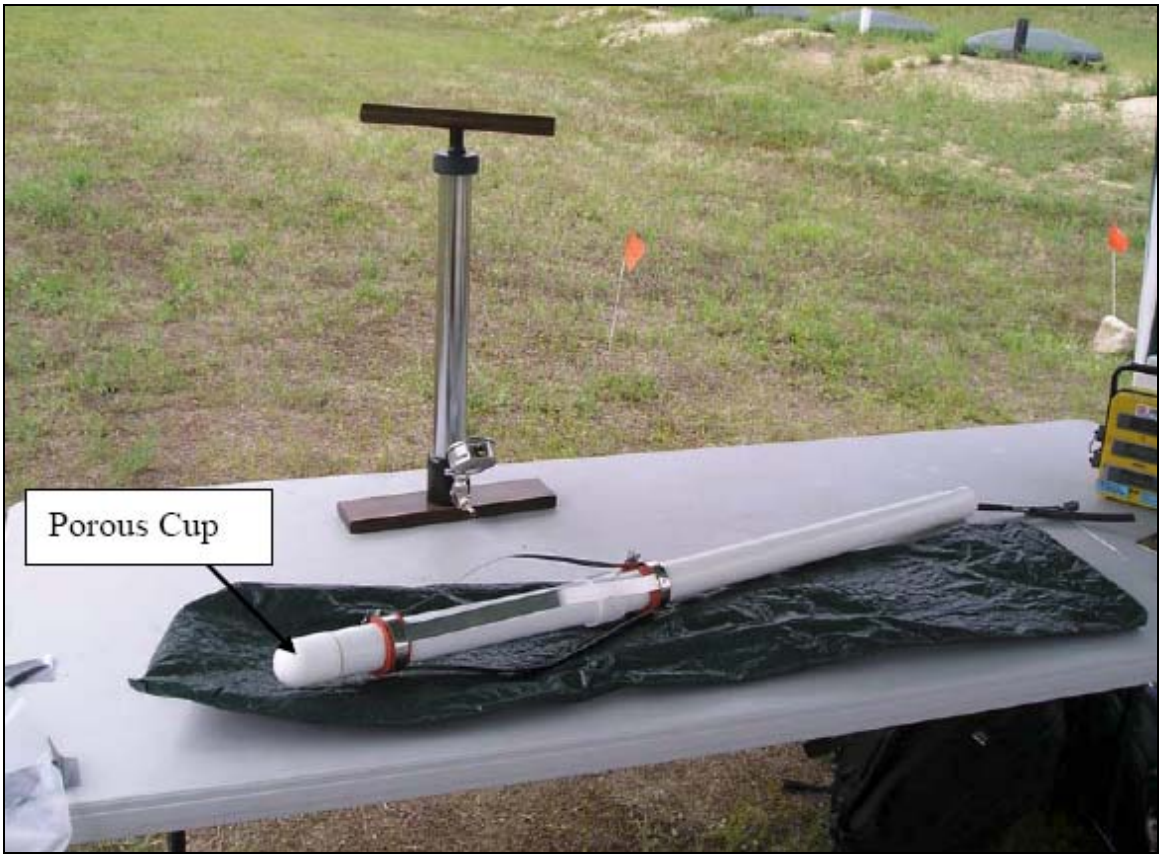

Figure A-4. Tension lysimeter.

A 200-µm mesh silica flour slurry was mixed and placed in the hole so that the ceramic cup, located at the end of the lysimeter assembly, was completely encased in silica slurry. Silica was added to the hole until the slurry was within 15 cm of the ground surface. Typically, sand is placed around the porous cup. However, lysimeters installed with sand by the USGS at Camp Edwards retained no water. AMEC had used silica flour around the porous cup for lysimeters installed in the impact area at Camp Edwards and collected water. Therefore, we used silica flour for this study. A silica flour pack increases the hydraulic contact between the lysimeter and the soil. Bentonite was then used as backfill to the ground surface to prevent short-circuiting of surface water along the lysimeter assembly. Each installation was completed by encasing the 5-cm-diameter lysimeter within a 10-cm-diameter and 30-cm-long piece of PVC pipe (Fig. A-5). Bentonite was placed around the outside of the 10-cm casing and between the lysimeter riser section and the 10-cm PVC casing. A PVC end cap was placed over the end of the 10-cm pipe. Between sampling events the top of the PVC cap was covered with soil so that it was not visible to the soldiers

using the firing range. The locations of the lysimeters were recorded so they could later be uncovered for sampling.

Figure A-5. Tension lysimeter installation.

The boring is started either adjacent to the bullet pocket (left or right) or from the top of the berm or angled for those lysimeters installed to monitor bullet pocket locations. The lysimeters are installed at an angle so that the tip (porous cup) is located beneath an area of undisturbed soil. The angle of the borings varied from 22 to 70° with a maximum tip depth varying from 25 to 165 cm bgs.

After installing the lysimeters on 7 and 8 September 2005, they were purged of all water and placed under a vacuum. Approximately one month after installation, 11 October 2005, all of the lysimeters were purged of water and the temperature and conductivity recorded. Since lysimeters 1, 2, and 3 were installed on 14 July 2005, they were purged on 7 September 2005 and again on 11 October 2005. After purging was complete, the lysimeters were placed under a vacuum. The original sampling and analysis plan specified three purging events prior to collection of samples

for tungsten analysis. However, when the water was purged from the lysimeters on 20 October 2005, the conductivity levels were similar to those recorded on 11 October 2005. Therefore, it was decided to collect the samples and submit them for analysis.

The lysimeters were sampled again 19 November and 15 December 2005 and 10 May 2006. Because some lysimeters were broken during shipping (the ceramic porous cup is fragile), two lysimeters were not installed until 15 December 2005. Three of the lysimeters broke during installation, so there are no lysimeters at locations 4, 13, and 16. The boring at location 23 could not be found later and therefore a lysimeter was not installed at this location. The lysimeters installed on 15 December 2005 were sampled on 10 May 2006 for the first time.

One question raised at the start of the project was whether tungsten in solution would react with the silica flour material used in lysimeter construction. In the first experiment, 10 g of range soil containing tungsten at a concentration of 12 mg/kg was mixed with 10 g of silica flour and 100 mL of deionized water. The resulting soil concentration was 12.3 mg/kg. A similar soil–silica flour mixture as above was made with 100 mL of deionized water and allowed to sit overnight. The water was decanted and analyzed, yielding a water concentration of 45.7 mg/L. A total of 10 g of the same stock of range soil was mixed with 100 mL of deionized water and allowed to sit overnight. The resulting tungsten concentration was 47.8 mg/L. A sodium tungstate solution of 400 mg/L concentration was purchased and diluted with 100 mL of deionized water to yield a solution concentration of 45 mg/L. A total of 100 mL of the 45 mg/L sodium tungstate solution was mixed with 100 g of silica flour and allowed to sit overnight. The solution was decanted and analyzed, yielding a tungsten concentration of 44.2 mg/L. Also, 10 g of silica flour material was spiked with 100 mL of sodium tungstate at concentrations of 1, 3, 5, 12.5, and 400 mg/L. No preferential loss of tungsten by concentration was observed. The data indicate no preferential sorption of tungsten onto the silica flour material.

APPENDIX B: X-RAY FLUORESCENCE (XRF)

Besides the fixed laboratory analyses, an assessment was conducted of the precision and accuracy of field-based XRF instrumentation. Field portable XRF units were used to assess their utility for rapid screening. Multi-increment soil samples were analyzed in the field by placing the XRF against the bagged sample and recording the metal concentration at three different locations on the sample.

XRF reproducibility in the field and laboratory was assessed by analyzing a 500-mg/kg and 1,000-mg/kg tungsten standard (Table B-1). Both the Niton and Innov-X units appear to have yielded reliable results. Although both XRF units are factory-calibrated, the Innov-X System A-4000 can have the response factor adjusted in the field. However, the response factor of the Innov-X System A-4000 instrument was not modified, even though the instrument appeared to be under-reporting the tungsten concentration. The adjustment was not done so comparisons would be made with data collected at different times throughout the project. The percent RSD for the Niton unit was less than the Innov-X unit for the 500 mg/kg standard, whereas the Innov-X had a lower percent RSD for the 1,000 mg/kg standard (Table B-1).

In conducting our field comparisons, we used the mean of three sample results because of the variability in individual sample results (Table B-2 and Fig. B-1). Since the XRF units analyze a very small cross-sectional area, i.e., less than the size of a dime, there is high probability of encountering markedly different soil concentrations. For example, if a tungsten particle happened to be located in the cross-sectional window for the measurement, a very high tungsten reading would be obtained. Less variability is evident in the Niton samples, which were dried prior to analysis, whereas the Innov-X samples were analyzed wet in the field.

Table B-1. Statistical comparison of tungsten QA standard results.

	Standard 500 (mg/kg)		Standard 1000 (mg/kg)	
	Niton	Innov-X	Niton	Innov-X
Number of analyses	6	12	8	11
Mean	463	448	809	976
Std Dev	25	46	102	20
Median	448	444	766	985
Minimum	402	402	710	944
Maximum	502	535	956	998
Variance	631	2117	10385	410
RSD (%)	5.4	10.3	12.6	2.1

Table B-2. XRF tungsten reproducibility for the Innov-X Model A-4000 and Niton XLi/XLp 722.

	Innov-X Model System A-4000			Niton Model XLi/XLp 722		
	Rep 1	Rep 2	Rep 3	Rep 1	Rep 2	Rep 3
Count	76	76	72	126	114	114
Mean	963	932	1,020	1,260	1,410	1,200
Median	325	308	312	637	713	609
Minimum	0	0	0	0	27	0
Maximum	16,400	16,500	14,200	16,500	18,500	9,180
Correlation w/Rep 1		0.95	0.96		0.95	0.85
Variance	3,835,765	3,717,338	3,890,526	3,554,378	4,885,005	2,243,813

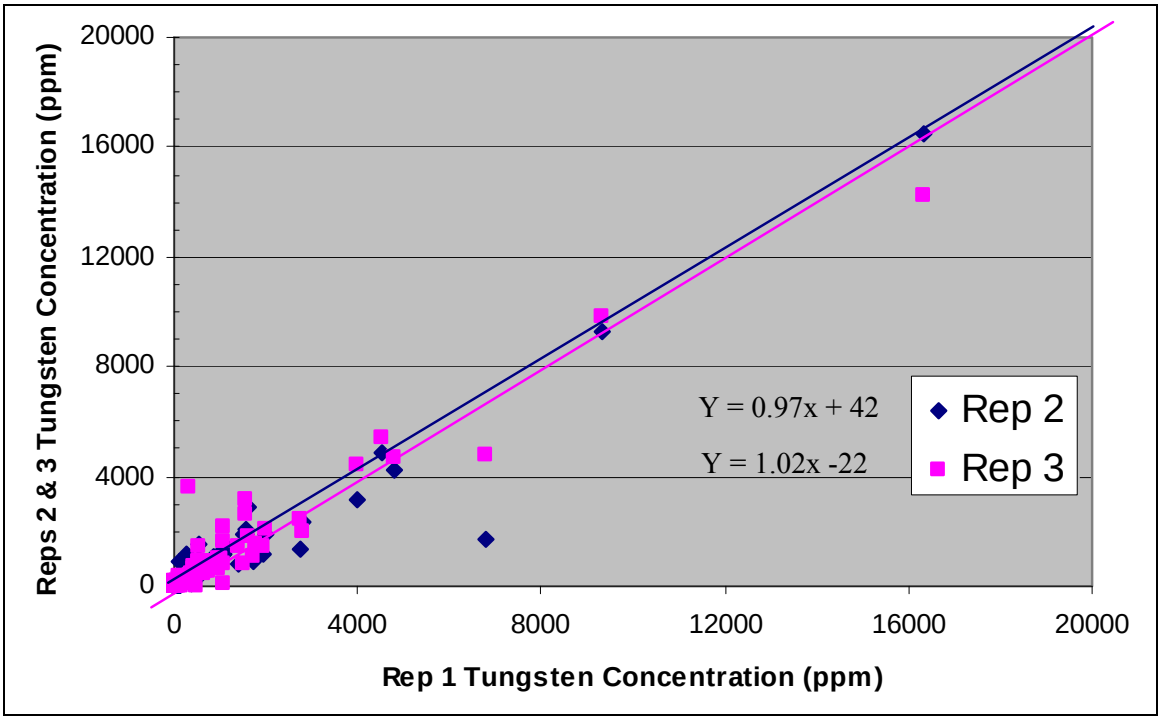

Figure B-1. Comparison of Innov-X XRF field replicate results for tungsten.

Once the sample was brought to the laboratory, it was air-dried and then re-analyzed with the XRF, again by making three measurements on the outside of the bag. Samples were then sieved through a 2-mm sieve. The < 2-mm portion was ground to flour-like consistency with a portion of the soil placed into a subsample cup with a Mylar film specifically designed for XRF analysis. The sample was then re-analyzed with the XRF.

No statistical difference using a paired t-test was found between the XRF analyses made in the field on moist soil and those made in the laboratory on the dried but unground soil for the 13 of 15 samples. This suggests soil moisture does not systematically affect the XRF measurements. As expected, less variability was evident between the sieved and ground soils as compared to the unground soils. The average values of the ground samples were also lower (Fig. B-2). Both of these observations are consistent with the fact that some portion of the tungsten in these samples occurs as solid particulates. The unground samples contain all size classes, whereas only the < 2-mm size fraction of the ground samples was analyzed. By grinding the soil, the small tungsten particulates are more equitably distributed in the sample, increasing the probability of obtaining a representative soil sample result.

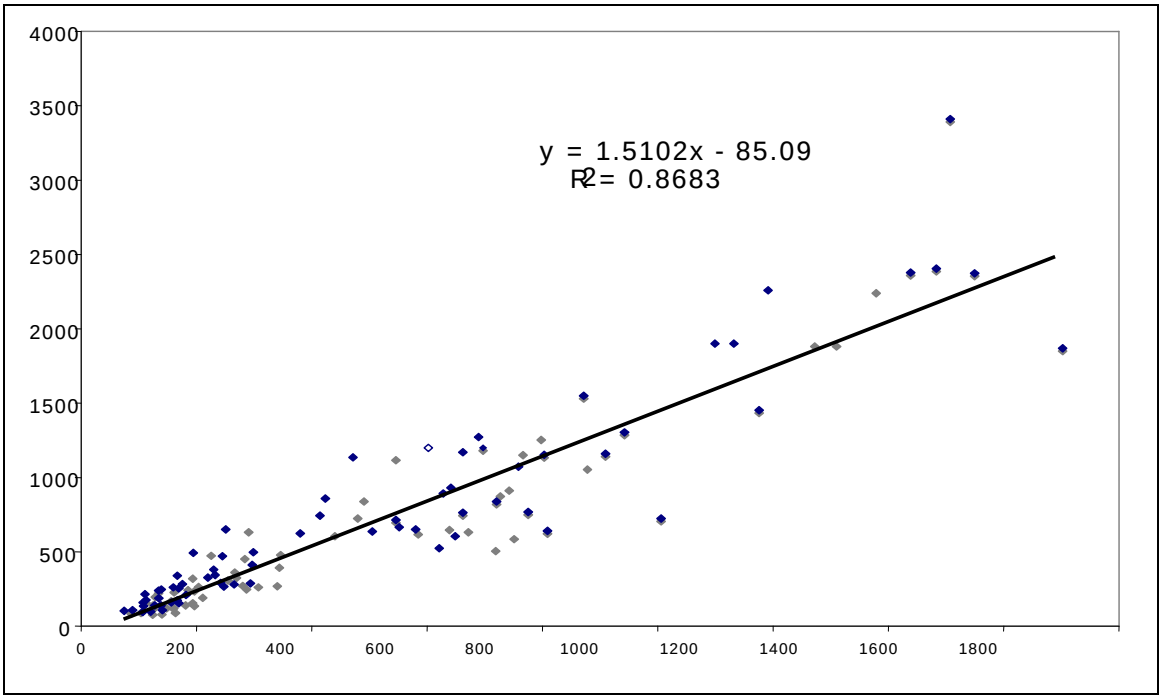

Figure B-2. XRF average tungsten concentrations for unground and ground soil samples.

Although there is tungsten in the > 2-mm size fraction we cannot, for practical reasons, grind this size fraction. Consequently, the ICP/MS analyses are made on the ground < 2-mm size fraction. Because these are multi-increment samples that generally weigh several kg, the question arises, "Can we subsample the multi-increment sample without having to grind the entire sample?" To answer this question, two multi-increment samples were split into two samples, with one from the berm at B Range and the other from I Range. Each sample was then split again into 12 subsamples using a Lab Tech ESSG Rotary Sampler Divider Model R505 riffle splitter, a device that mechanically divides the sample into 12 equal portions. The subsamples were then individually ground and analyzed, i.e., both the > 2-mm and < 2-mm portion of the splits. The results show up to a factor of five variability in individual XRF values, a little over a factor of two variability among the XRF averages of the 12 splits, and less than a 20-percent variability among the ICP/MS analyses of four of the splits (Table B-3).

Table B-3. ICP and XRF tungsten results of split soil samples from Berms B and I.

Split	Innov-X XRF						ICP/MS				
	Rep 1	Rep 2	Rep 3	XRF mean (mg/kg)	Std dev (mg/kg)	RSD (%)	W mass > 2 mm (g)	W mass < 2 mm (g)	W conc. > 2 mm (mg/kg)	W Conc. < 2 mm (mg/kg)	Total W (mg/kg)
B Range berm											
A	3,680	7,600	2,330	4,540	2,730	60	47	228	3,480	1,840	2,130
B	2,940	2,440	2,350	2,570	319	12					
C	690	2,780	2,510	1,990	1,140	57					
D	2,290	2,470	2,180	2,310	146	6	40	226	2,850	1,880	2,030
E	2,100	4,250	3,920	3,420	1,160	34					
F	2,490	3,299	5,140	3,640	1,360	37					
G	2,250	2,540	2,450	2,410	140	6	43	233	2,300	1,660	1,760
H	2,280	2,600	2,710	2,530	221	9					
I	2,220	2,310	2,190	2,240	60	3					
J	3,350	3,100	2,700	3,050	327	11					
K	2,070	2,360	2,360	2,260	165	7	38	241	1,850	1,890	1,880
L	2,680	2,660	2,620	2,650	30	1					
Mean	2,420	3,200	2,790	2,800					2,620	1,820	1,950
Std Dev	746	1,490	872	736					706	107	160
RSD (%)				26					27	6	8
I Range berm											
A	451	738	561	583	145	25	28	189	466	1,680	621
B	608	662	537	602	63	10					
C	452	799	624	625	174	28					
D	504	611	619	578	64	11	29	191	452	2,770	753
E	625	470	686	594	111	19					
F	1,050	701	491	747	282	38					
G	2,100	793	492	1,130	856	76	30	199	446	2,550	720
H	584	667	596	615	45	7					
I	437	2,020	564	1,010	881	87					
J	862	512	489	621	209	34					
K	597	520	601	573	46	8	25	191	460	1,550	585
L	666	646	601	638	33	5					
Mean	745	762	572	693					456	2,140	670
Std Dev	463	764	573	183					9	611	80
% RSD				26					2	29	12

STD Standard deviation
RSD Relative standard deviation

Figure B-3 compares the results obtained with the XRF on both ground and unground soils and ICP/MS analyses for 70 soils having tungsten concentrations above those detectable by the XRF. A paired t-test shows the two sets of analyses for both ground and unground samples have the same mean at a 95% confidence level. Here again the XRF tends to yield higher tungsten values than the ICP/MS, probably because of the removal of the > 2-mm size fraction for the ICP/MS analyses. As discussed earlier, a significant portion of the total tungsten mass is associated with the > 2-mm soil size fraction.

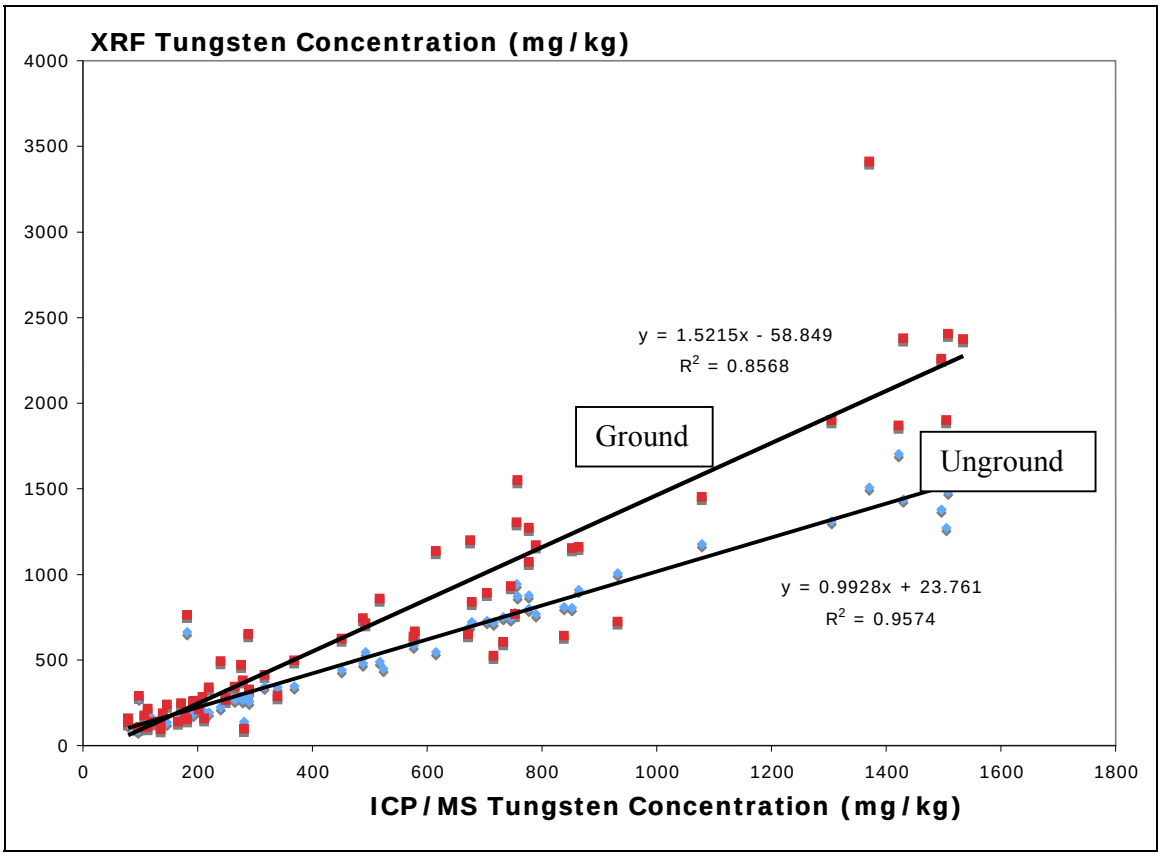

Figure B-3. Comparison of XRF and ICP results for tungsten.

Lastly, comparisons of XRF tungsten data for the Innov-X and Niton XRF units indicated no appreciable difference between the two systems (Table B-4 and Fig. B-4). Based on these results, the XRF is an excellent screening tool for the field. The XRF instruments do need to be calibrated for a given metal and a standard should be run at the beginning of each analytical session and periodically over the course of the analyses.

Table B-4. Comparison of Niton and XRF tungsten (mg/kg) average results for the same sample.

	Instrument	
	Niton	Innov-X
Number of analyses	290	290
Mean (mg/kg)	1,020	1,030
Median (mg/kg)	357	329
Minimum (mg/kg)	0	0
Maximum (mg/kg)	18,400	16,500
Correlation	0.94	
Variance	3,980,000	4,600,000

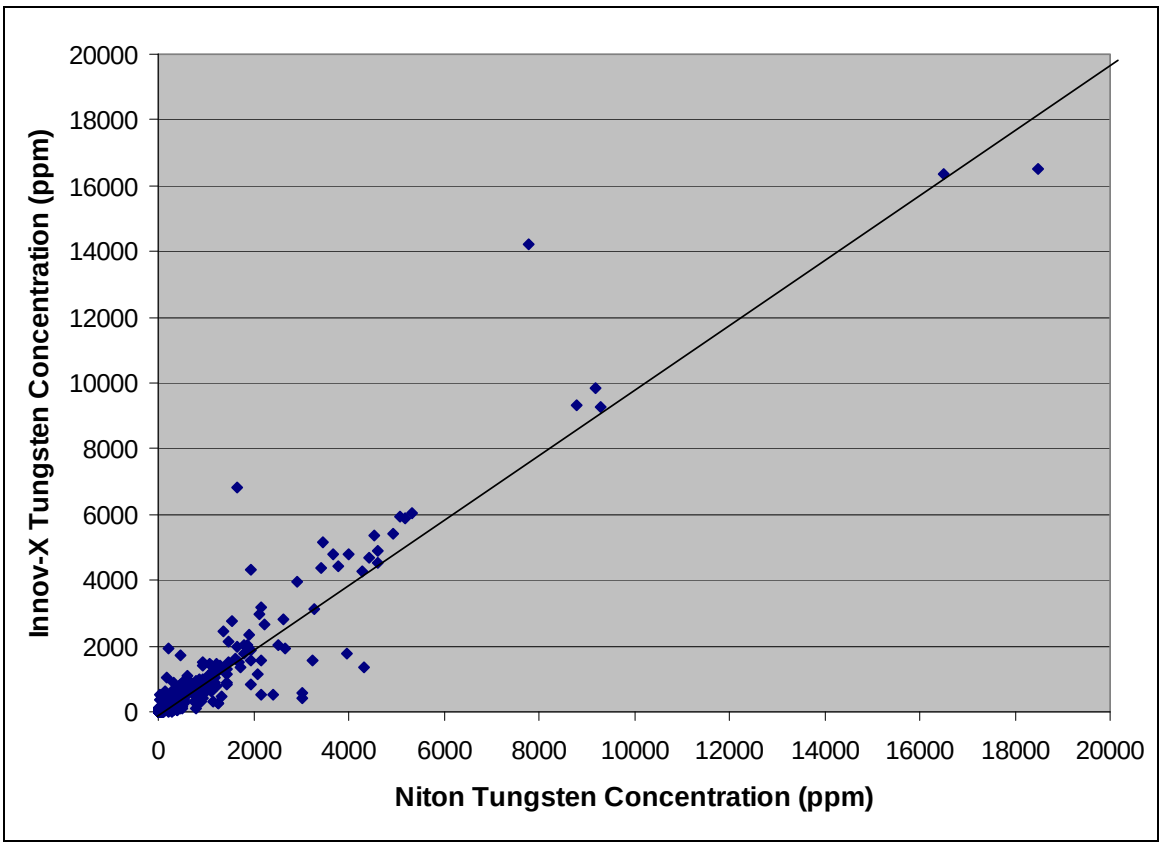

Figure B-4. Comparison of XRF results for the Niton XLi/XLp 722 bulk sample analyzer and an INNOV-X System A-4000.

APPENDIX C: X-RAY DIFFRACTION (XRD)

The clay mineralogy and content of the soil is particularly important because clays determine a soil's ability to retain soluble metals. The instrument had a copper alpha source with the K line of the copper spectrum analyzed (1.54-angstrom wavelength) and a 40-mA fixed divergence slit of 1°. The XRD was operated at 40 kV and scanned the sample from 2 to 60° in 0.05° steps. To determine the total mineralogy, a surface soil sample collected from the berm area was ground and run as a randomly oriented packed powder.

To determine the types of clay present, slides were prepared of the < 2-µm size fraction by placing the ground sample in deionized water and centrifuging it for one minute at 1,500 rpm. The supernatant contains the clays and this water–clay mixture was dripped onto a glass slide until the slide was well coated. As the water evaporates, the clays tend to align and form an oriented sample. The sample was analyzed with the XRD and then placed in an ethylene glycol atmosphere overnight and reanalyzed.

The XRD results indicate that quartz is the main mineral, followed by feldspar and mica (Fig. C-1). There was no expansion of the crystal structure of the clay minerals after exposure to ethylene glycol, indicating few expandable smectite clays.

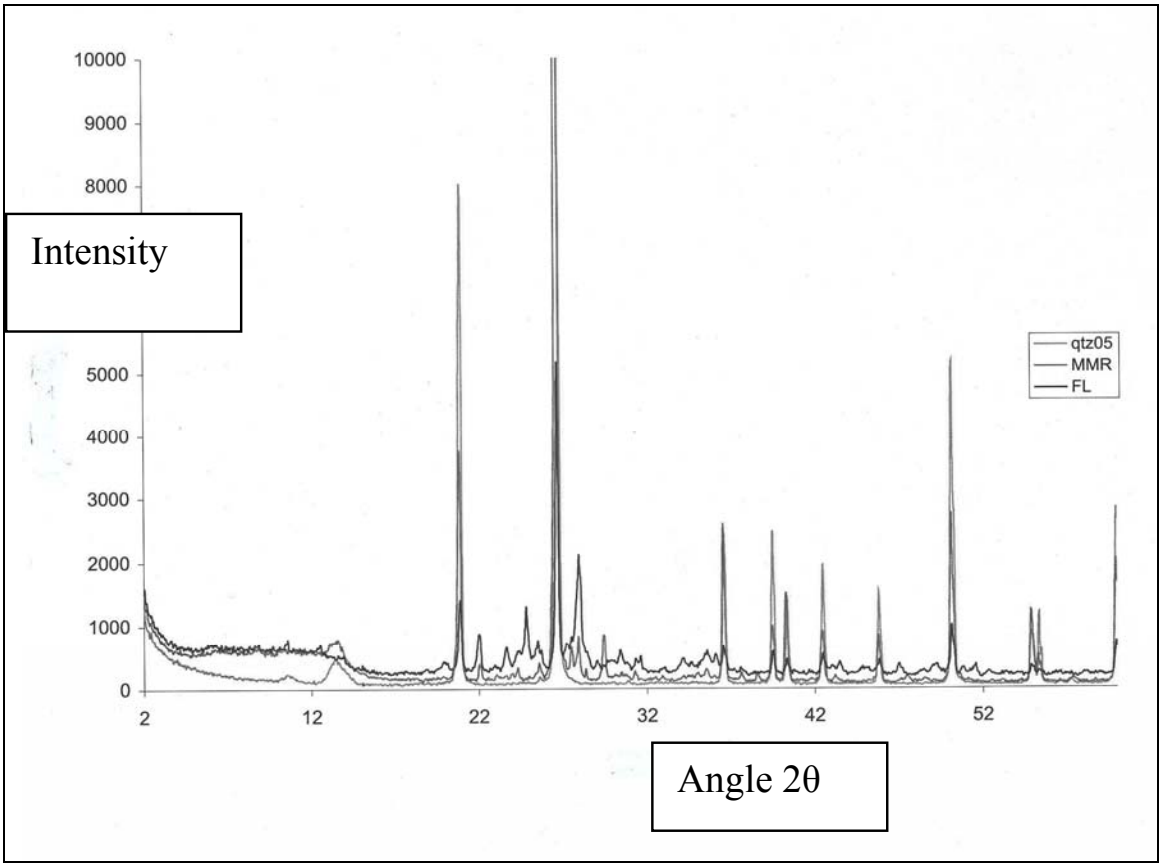

Figure C-1. EDAX results for Camp Edwards soil sample.

APPENDIX D: SCANNING ELECTRON MICROSCOPY (SEM)

An XL-30 ESEM-FEG scanning electron microscope (SEM) located at Dartmouth College was used to identify the physical form and distribution of tungsten particles in the bullets, in the soil, and to image the microscopic structure of the soil. Secondary electron and backscatter electron detectors allowed the soil to be imaged. The backscatter detector, which is sensitive to changes in atomic number, is particularly useful for finding tungsten grains as these have very high atomic number and appear bright. The composition of these and other grains of interest was checked using the energy-dispersive X-ray microanalysis system (EDAX). This system allows semi-quantitative elemental analysis on elements heavier than carbon.

Two tungsten/nylon bullets were examined with the SEM: one had been sectioned and had the copper jacket and the steel penetrator attached, the second was a piece broken from a tungsten/nylon slug. We observed no difference between the broken and the sectioned surface of the bullet. Figure D-1 is a SEM electron micrograph of the broken surface of a tungsten/nylon round. The bright spots (white) are tungsten and the gray and dark areas are nylon. Cracks in the sample resulted from fracturing the tungsten/nylon bullet.

The tungsten/nylon slug has submicron to approximately 50-µm tungsten particles embedded in nylon (Fig. D-1 and D-2). Overall, the tungsten is uniformly distributed except in a few areas containing little tungsten; these appear dark on the backscattered image. The tungsten grains themselves are faceted and reflect the metal's cubic crystal structure. The contacts between the copper jacket and the tungsten/nylon (Fig. D-3) and between the steel penetrator and the tungsten/nylon (Fig. D-4) were imaged. Figure D-3 indicates there is a space between the copper and the tungsten/nylon, i.e., the diagonal strip in the center of the micrograph, whereas the steel and the tungsten/nylon appear well-bonded (Fig. D-4), i.e., vertical strip in middle of micrograph.

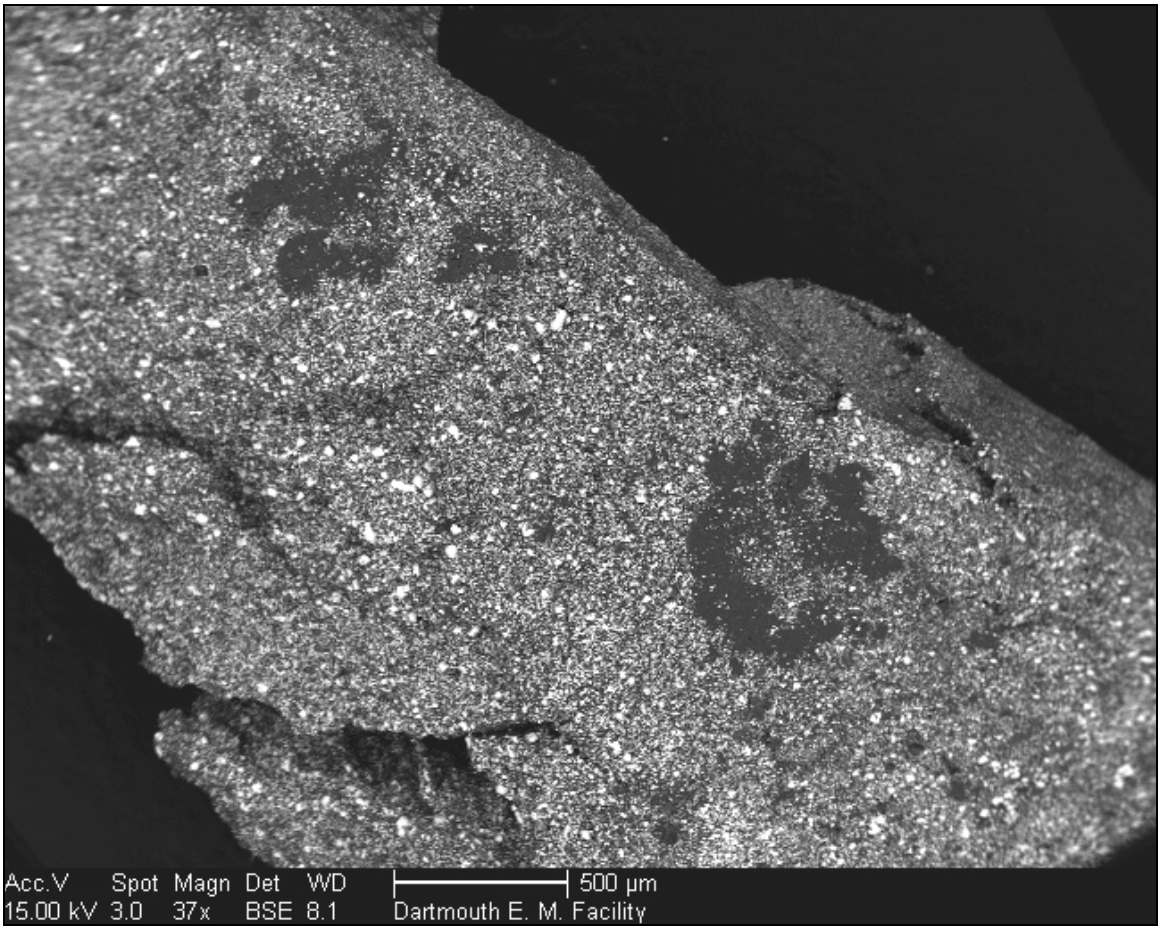

Figure D-1. SEM micrograph of broken surface of tungsten/nylon round.

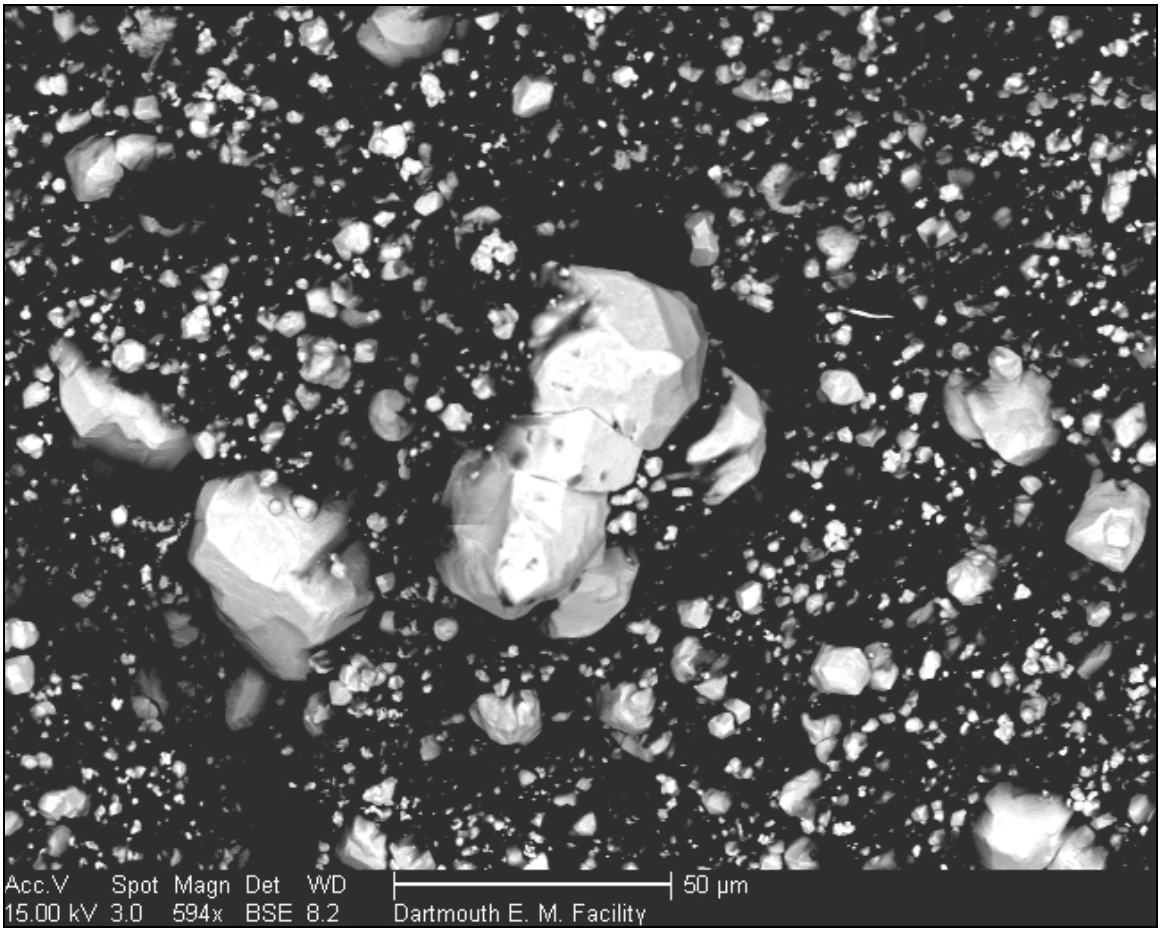

Figure D-2. Magnified SEM micrograph of broken surface of tungsten/nylon round.

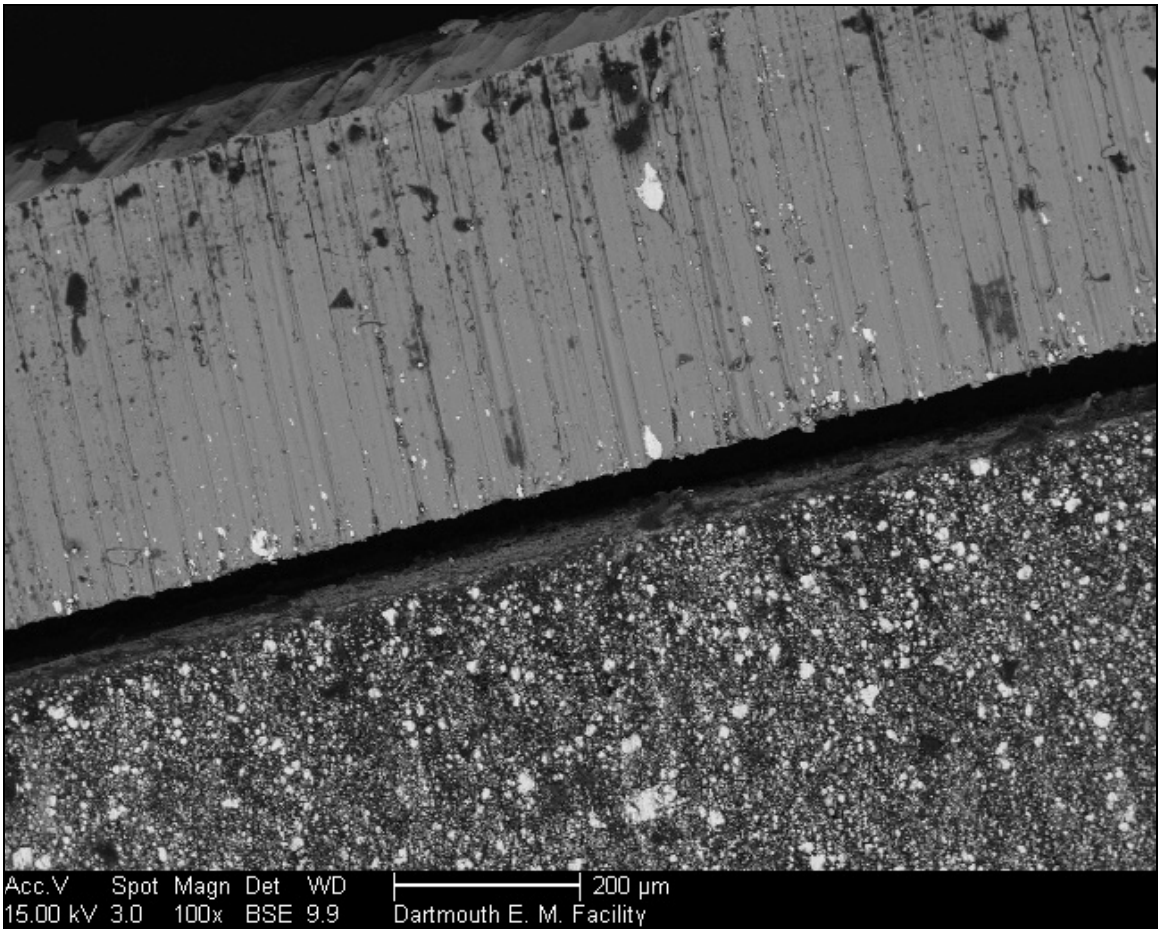

Figure D-3. Magnified SEM micrograph of copper jacket and tungsten/nylon interface.

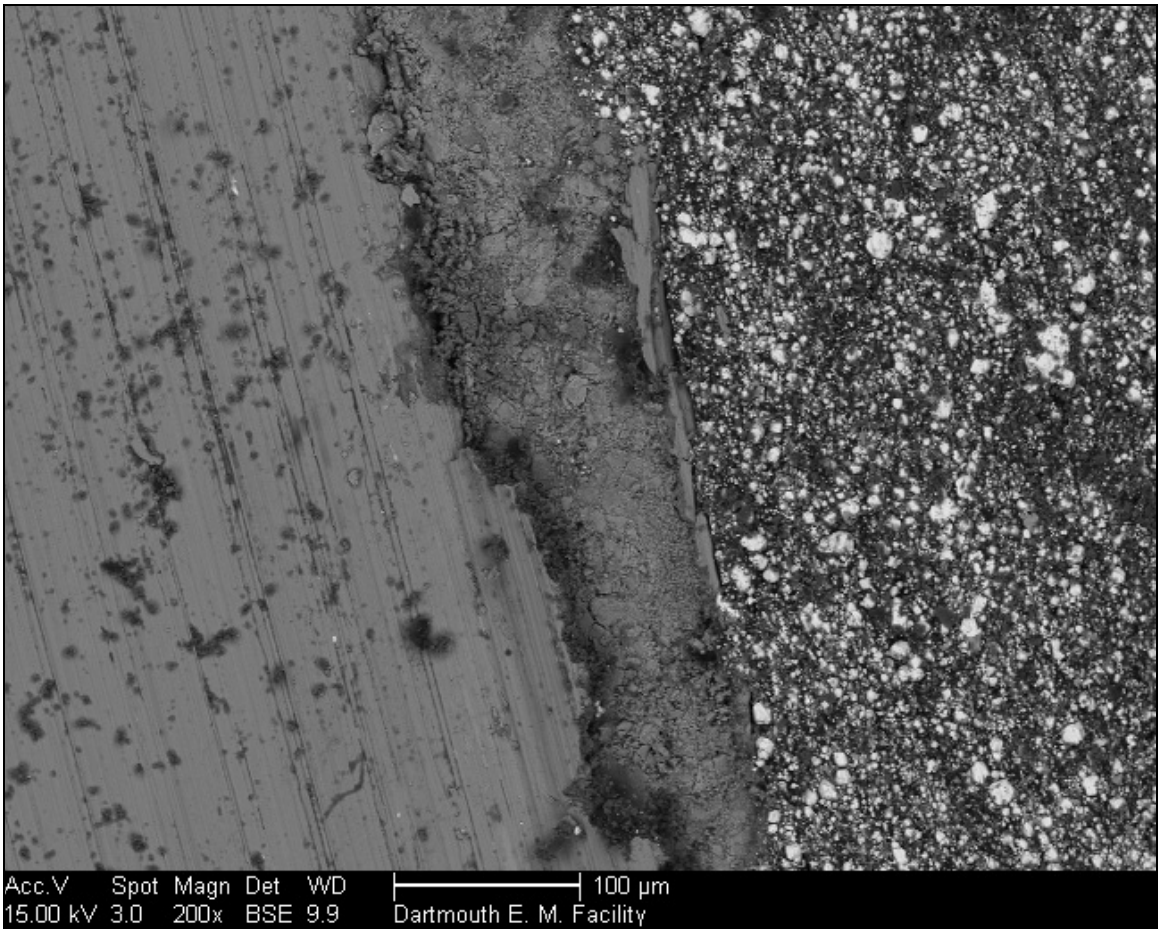

Figure D-4. Magnified SEM micrograph of steel penetrator and tungsten/nylon interface.

Using the SEM/EDAX, we examined a small amount of soil (a few thousand grains) from the 0- to 5-, 20- to 25-, and 40- to 50-cm intervals from a core taken from the trough on B Range. Table D-1 shows XRF and ICP/AES results for this core.

Table D-1. Soil profile results using XRF and ICP.

	Niton (mg/kg)	Innov-X (mg/kg)	ICP/AES
Depth (cm)	Average n = 3	Average n = 3	Single results (mg/kg)
0–5	5,080	5,760	3,520
5–10	4,200	5,220	2,540
10–15	1,220	1,270	754
15–20	516	665	417
20–25	466	530	2420
25–30	353	376	266
30–40	393	380	281
40–50	342	427	272
50–60	160	194	137

Tungsten particles evident in the surface sample, 0 to 5 cm (Fig. D-5), were generally a few micrometers across, smaller than the quartz in the soil. The brightness in the backscattered images allowed for finding the tungsten particles. Tungsten particles occur as discrete grains that generally have nylon attached to them, suggesting they are small fragments of the bullet (Fig. D-5).

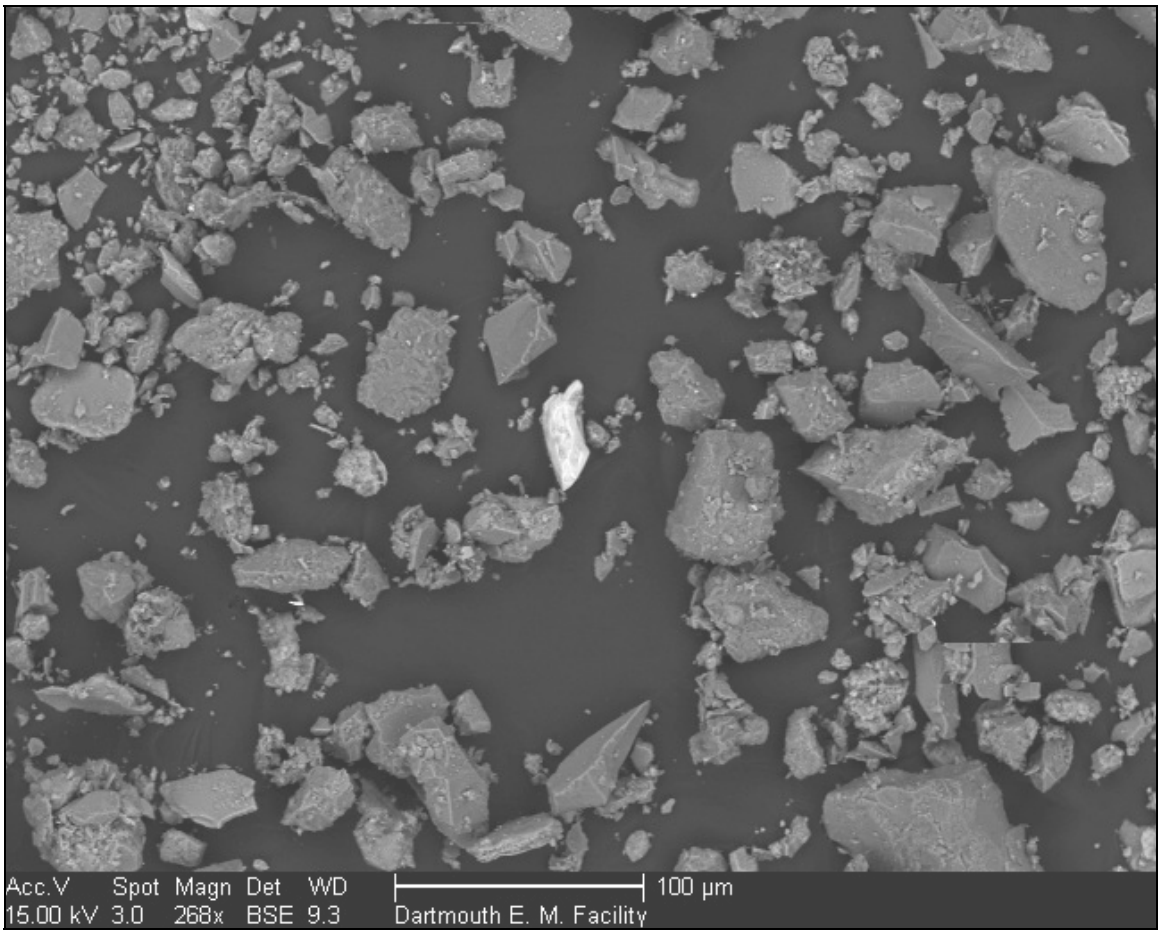

Figure D-5. Magnified SEM micrographs of 0- to 5-cm soil sample from Bravo Range.

Tungsten particles were not visible in the 20- to 25- or 40- to 50-cm samples despite chemical analyses indicating the presence of tungsten. The concentration of tungsten is low in the 20- to 25- and 40- to 50-cm intervals, suggesting the density of tungsten particles is also low and therefore the probability of having a tungsten particle in the samples examined by SEM is extremely low. It is also possible the tungsten is no longer in particles but has dissolved and precipitated with other elements.

APPENDIX E: SOIL METAL RESULTS

Sample ID	As (ppm)	Cr (ppm)	Cu (ppm)	Fe (ppm)	Pb (ppm)	Mn (ppm)	Mo (ppm)	Ni (ppm)	Sb (ppm)	V (ppm)	Zn (ppm)
MMRBFP006S1	1.223	75.87	21.52	4333	28.71	49.76	0.421	3.204	10.41	9.35	13.68
MMRBFP007S2	1.257	75.78	19.76	4738	24.12	52.35	0.1	3.313	10.51	10.51	14.27
MMRBRF008S1	1.396	84.48	27.19	6843	53.7	85.81	0.341	5.151	11.89	16.29	29.48
MMRBRF009S2	1.342	82.33	24.05	7117	49.23	88.44	0.413	5.236	12.52	17.04	27.21
MMRBUB010S1	1.563	66.5	311.4	3580	292.1	29.84	0.162	2.76	10.39	7.296	22.56
MMRBUB011S2	1.484	57.87	239.1	3406	213.8	27.81	ND	2.492	10.41	7.127	20.78
MMRBRF012S1	1.747	82.77	45.69	5394	155.8	63.97	0.771	4.656	10.39	11.74	23.62
MMRBRF013S2	1.862	82.82	25.76	5952	230	70.16	0.145	4.889	11.01	12.7	28.03
MMRBTA019S1	2.048	83.84	77.33	4998	1207	47.87	0.387	4.358	21.4	10.17	25.15
MMRBTA020S	2.183	84.49	25.06	5437	898.9	52.49	0.244	4.57	17.6	10.91	25.93
MMRBTA021S2	1.75	62.02	63.87	4364	311.8	41.79	0.332	3.688	8.315	9.204	22.5
MMRBMB022S1	1.768	68.32	1202	4964	378.2	41.33	ND	3.368	10.61	10.37	82.83
MMRBMB023S2	1.851	69.92	1327	4902	409.3	40.21	ND	3.285	10.93	10.23	91.54
MMRBLB024S1	1.277	43.75	1578	3918	331.1	36.07	ND	2.949	7.135	7.857	38.2
MMRBLB025S2	1.662	67.25	723.5	3378	298.9	32	ND	2.904	10.6	6.644	41.77
MMRBLB026S3	1.673	67.02	889.1	4656	546.3	40.43	0.178	3.296	13.14	9.895	40.19
MMRBLB027S1	1.238	46.27	813.3	3097	296.7	26.89	ND	2.469	6.936	6.018	31.77
MMRBLB028S2	1.488	64.33	27.18	3924	284.5	34.78	ND	3.201	10.69	8.209	15.41
MMRBLB029S3	1.592	63.8	848.4	4233	286.3	34.45	ND	3.001	10.98	8.81	36.16
MMRBMB030S1	1.778	67.95	1185	4721	816	40.62	ND	3.301	18.1	9.758	55.12
MMRBMB031S2	1.722	64.29	1080	4670	425.9	39.26	ND	3.251	12.75	9.286	49.53
MMRBMB032S3	1.822	69.59	1217	4122	408.9	36.61	ND	3.05	12.88	7.55	64.24
MMRBTR033S1	4.581	142	810.5	4617	262.5	45.05	ND	4.198	10.04	8.711	44.19
MMRBTR034S2	1.727	63.46	731.4	5289	360.5	51.85	0.077	4.56	9.457	10.87	36.86
MMRBTR035S3	1.64	59.69	1035	4882	301.1	46.17	0.2	4.059	9.088	10.05	33.81
MMRBMB036S3	1.686	67.97	825	3827	362.1	32.85	ND	3.051	13.44	7.303	60.42
MMRBLB038S	4.439	136.1	46.45	5107	587.7	47.44	0.259	4.913	13.96	10.55	24.65
MMRBTR039S	1.661	63.63	48.9	6356	354	62.61	0.726	4.948	9.731	14.24	24.01
MMRBMB040S4	1.309	43.49	1087	5126	307.2	45.84	0.01	3.989	5.589	11.17	134.6
MMRBLB041S	1.624	66.48	89.51	4043	355	38.83	0.06	3.319	11.7	8.2	23.83
MMRBMB042S	1.646	63.03	102.8	5726	336.2	52.9	0.397	4.223	9.092	12.69	26.84
MMRBLB043S	1.526	60.64	204.9	3206	243.1	27.28	ND	2.525	9.96	6.119	25.82
MMRBMB44S	1.528	63.12	283	3220	239.7	23.77	ND	2.265	NA	NA	25.03
MMRBBG045S	1.121	54.04	3.362	4052	14.82	36.38	0.419	3.6	7.296	17.16	11.75

Sample ID	As (ppm)	Cr (ppm)	Cu (ppm)	Fe (ppm)	Pb (ppm)	Mn (ppm)	Mo (ppm)	Ni (ppm)	Sb (ppm)	V (ppm)	Zn (ppm)
MMRBMB046S	1.489	60.66	489.1	3703	180.8	28.14	ND	2.453	9.576	7.474	48.11
MMRBLB047S	1.914	80.13	54.21	3319	188.4	36.58	0.394	2.954	12.76	6.443	20.26
MMRBTR048B	3.859	111.5	408.3	5935	394	57.65	0.309	4.805	10.95	13.8	36.32
MMRBTR049B	3.448	104.1	48.19	5265	300	44.79	0.662	4.496	10.62	11.89	22.42
MMRBTR050B	3.437	108.3	36.76	4422	429.4	38.16	ND	4.462	13.55	8.62	19.55
MMRBMB055B	1.532	63.43	211.9	4614	288.7	36.76	ND	2.832	9.543	9.622	27.72
MMRBMB056B	3.386	111	40.44	4054	189.9	32.02	ND	4.137	11.18	7.708	17.39
MMRBMB057B	3.116	111.9	28.11	4121	200.8	32.15	ND	4.161	11.34	8.191	15.88
MMRBMB058B	3.346	102	27.76	4901	371.7	39.24	0.286	4.659	9.889	10.96	18.66
MMRBMB059B	2.483	99.35	11.51	4443	71.17	29.61	ND	2.884	9.984	9.998	10.23
MMRBMB060B	1.766	68.63	177.5	4040	283.7	31.6	ND	2.743	11.27	8.135	18.89
MMRBMB061B	3.386	111	40.44	4054	189.9	32.02	ND	4.137	11.18	7.708	17.39
MMRBMB062B	3.116	111.9	28.11	4121	200.8	32.15	ND	4.161	11.34	8.191	15.88
MMRBMB063B	3.346	102	27.76	4901	371.7	39.24	0.286	4.659	9.889	10.96	18.66
MMRBMB064B	2.483	99.35	11.51	4443	71.17	29.61	ND	2.884	9.984	9.998	10.23
MMRBTR065B	3.489	104.7	33.75	5402	552.7	52.12	0.32	4.103	15.28	13.58	22.25
MMRBTR066B	1.457	61.87	21.44	4867	283	40.11	ND	3.039	10.43	10.77	15.68
MMRBTR067B	1.602	66.54	31.29	5672	340	53.05	ND	4.081	10.37	13.22	19.65
MMRBMB068B	1.621	69.43	37.76	4125	345.5	30.07	ND	2.809	12.09	8.423	16.67
MMRBMB069B	3.343	111.4	19.68	4204	167.7	26.54	ND	3.854	9.402	9.241	15.62
MMRBMB070B	3.259	107.8	25.5	4191	222.5	27.63	ND	3.58	10.97	8.65	15.29
MMRBMB071B	2.162	71.86	33.81	5753	1140	53.34	1.127	4.173	23.76	17.63	21.8
MMRBMB072B	3.164	106.7	25.67	4353	175.4	34.63	0.347	3.979	9.368	9.178	16.37
MMRBLB073B	1.668	52.35	16.875	2701	276.4	26.06	0.16	2.052	10.54	6.79	11.125
MMRBLB074B	2.102	69.45	46.51	5447	345.9	47.8	0.595	3.664	10.03	16.62	21.8
MMRBLB075B	3.431	104.3	31.6	4579	258.7	38.23	0.155	4.411	9.592	10.04	19.44
MMRBLB076B	NA	69.7	20.26	3677	152.1	28.72	ND	2.98	8.398	7.932	15.06
MMRBUB077B	1.276	62.36	111.9	3423	836.2	23.49	ND	2.428	20.17	2.976	15.05
MMRBUB078B	1.043	54.28	11.19	2316	47.13	19.04	0.101	1.655	10.1	4.934	6.123
MMRBUB079B	NA	58.66	5.653	2655	11.63	21.51	ND	1.7	9.216	5.528	5.284
MMRBUB080B	NA	57.15	3.467	2500	40.45	20.46	ND	1.617	8.429	4.943	5.707
MMRBUB081B	0.992	54.76	2.234	2397	22.54	20.71	0.1	1.559	9.586	5.302	5.44
MMRBMB082S	1.63	64.68	214	4979	379.5	43.49	ND	3.727	11.38	10.44	40.65
MMRCFP-TA001S	1.318	73.17	18.74	5125	121.6	60.97	0.492	4.209	9.628	11.63	21
MMRCMB002S1	1.647	66.34	370.1	4664	651.1	41.28	ND	3.371	15.38	9.574	40.82
MMRCTR003S1	1.699	68.01	109.8	5770	465.4	61.03	0.333	4.442	11.78	11.47	31.59
MMRCMB004S1	1.87	84.33	311.1	4335	1092	43.47	0.112	3.897	17.86	8.712	45.67
MMRCMB005S2	1.705	70.07	643.4	5570	570.1	49.05	ND	3.596	13.69	11.95	85.26
MMRCTR006S2	1.677	70.31	195.6	5784	344.8	57.83	ND	4.274	10.59	12.5	41.35

Sample ID	As (ppm)	Cr (ppm)	Cu (ppm)	Fe (ppm)	Pb (ppm)	Mn (ppm)	Mo (ppm)	Ni (ppm)	Sb (ppm)	V (ppm)	Zn (ppm)
MMRCMB007S3	1.707	68.53	382.5	3778	448.2	35.67	ND	2.946	14	7.292	51.3
MMRCFP-TA008S2	1.396	72.54	18.47	5084	139.2	57.96	0.414	3.887	10.28	11.51	19.6
MMRCMB009S2	1.662	68.91	316.8	4347	484.7	44.22	ND	3.558	12.91	8.447	43.77
MMRCTR010S3	1.211	45.13	102.7	5772	359	59.1	0.013	4.05	5.73	12.18	31.07
MMRCMB011S3	1.654	69.68	390.1	4729	326.2	44.9	ND	3.566	12.26	9.806	49.63
MMRCTR012B	1.686	70.5	58.97	5641	539.9	54.7	0.141	4.39	14.34	11.61	28.68
MMRCTR013B	3.171	103.1	19.41	4483	243.9	41.9	ND	3.558	10.08	9.21	14.89
MMRCTR014B	NA	59.9	67.25	3626	368	35.45	ND	2.561	11	7.722	15.45
MMRCTR015B	2.047	99.11	2.764	2290	26.15	26.05	0.752	2.176	10.68	3.763	5.518
MMRCTR016B	1.048	54.84	1.972	1909	13.38	20.01	ND	1.629	9.33	3.967	7.311
MMRCTR017B	NA	52.93	1.55	2185	2.422	21.03	ND	1.378	8.868	4.04	4.581
MMRCBG018S	1.307	77.98	8.636	8245	5.809	192.1	0.171	8.427	9.009	18.52	31.76
MMRCUB019S1	1.459	64.37	73.11	4590	430.6	43.71	0.13	3.543	12.57	9.285	24.69
MMRCUB020S2	1.101	41.69	93.13	4774	526.7	44.97	0.09	3.222	8.665	10.23	27.02
MMRCUB021B	1.69	68.54	35.96	5266	990.2	48.02	0.271	4.057	21.5	11.57	22.54
MMRCUB022B	NA	60.54	18.88	3877	344.8	39.42	ND	3.323	11.35	7.869	14.09
MMRCUB023B	1.415	61.21	17.89	4344	280.4	44.25	ND	3.701	11.47	9.969	18.33
MMRCUB024B	1.357	59.17	14.55	3732	270.5	37.81	ND	3.003	9.87	8.356	14.56
MMRCUB025B	1.311	58.48	10.89	3540	180.1	36.19	ND	2.932	10.06	7.704	12.45
MMRCUB026B	1.0576	54.24	5.884	2666	82.04	29.36	0.051	2.4	10.72	5.636	9.722
MMRCMB027B	1.622	67.7	588.3	4072	352.6	34.85	ND	3.153	13.59	8.37	80.49
MMRCMB028B	2.047	99.11	2.764	2290	26.15	26.05	0.752	2.176	10.68	3.763	5.518
MMRCMB029B	1.488	64.33	27.18	3924	284.5	34.78	ND	3.201	10.69	8.209	15.41
MMRCMB030B	1.643	69.04	28.28	5259	421.4	50.02	ND	4.027	13.54	12.06	20.04
MMRCMB031B	1.465	63.74	32.12	3908	435.1	35.58	ND	2.803	13.49	8.341	15.63
MMRCMB032B	NA	59.04	34.86	2527	461.5	26.69	ND	2.241	14.22	5.001	12.04
MMRCMB033B	1.506	63.08	33.42	4496	264.4	34.36	0.03	2.748	10.66	10.03	16.75
MMRCMB034B	3.218	110.1	32.95	5559	263.5	44.88	0.167	4.745	10.1	11.63	20.39
MMRCMB035B	NA	63.06	30.32	3978	211.2	32.35	ND	3.348	8.821	8.421	15.87
MMRCMB036B	1.5	63.07	25.91	5323	352.1	44.75	ND	4.044	12.11	11.98	18.96
MMRCMB037B	1.588	69.36	35.72	4551	353.6	43.05	0.197	3.602	13.35	10.05	19.23
MMRCMB038B	1.3	60.03	13.2	3614	247	33.47	0.185	2.811	11.95	7.308	13.62

Sample ID	As (ppm)	Cr (ppm)	Cu (ppm)	Fe (ppm)	Pb (ppm)	Mn (ppm)	Mo (ppm)	Ni (ppm)	Sb (ppm)	V (ppm)	Zn (ppm)
MMRITR002S1	3.962	134.8	130.9	4156	263.3	50.33	0.115	3.352	12.79	8.445	23.6
MMRILB003S3	0.945	39.58	342.6	2771	79.21	25	0.044	2.111	5.937	5.44	20.19
MMRIBB004S1	1.615	58.55	411.7	3643	282.8	89.37	0.271	3.79	13.08	7.521	71.08
MMRILB005B	1.336	64.42	50.06	3467	55.38	25.75	0.262	2.528	10.05	7.395	18.24
MMRILB006B	1.401	67.43	182.3	4032	604.5	25.55	0.392	2.358	17.05	8.935	18.94
MMRILB007Ba	1.522	71.22	25.73	3697	68.11	22.1	0.652	2.289	8.2	7.46	11.38
MMRILB007Bb	1.551	74.71	26.77	3993	64.51	23.64	0.269	2.495	9.639	8.253	11.81
MMRILB007Bc1	1.534	74.47	25.75	3946	70.58	23.31	0.272	2.535	9.373	8.18	11.66
MMRILB007Bc2	1.529	75.4	26.59	3914	72.26	23.7	0.266	2.551	9.191	8.238	11.85
MMRILB007Bc3	1.592	75.77	26.81	3686	78.41	22.69	0.198	2.397	9.245	7.386	11.86
MMRILB008B	3.048	99.98	29.22	4124	96.12	29.35	0.733	2.769	10.43	9.717	14.58
MMRITR009S2	1.5	68.39	189	4295	363.3	53.24	0.333	3.434	13.99	8.883	22.56
MMRIUB010S1	4.293	134.9	28.53	5512	136.3	58.03	0.397	4.583	9.265	11.89	24.9
MMRILB011S2	1.383	66.23	587.9	3982	90.75	30.92	ND	2.477	10.64	8.195	23.09
MMRILB012S1	1.311	62.55	536.6	3119	377.1	26.08	0.049	2.259	14.27	6.341	22.42
MMRITR013S3	1.562	69.62	226.1	4511	398.3	54.83	0.222	3.552	14.68	9.393	9.393
MMRIFP-TA014S2	1.309	76.86	219.5	5599	181	44.8	0.489	4.102	12.34	14.83	26.32
MMRIFP-TA014S2c1	1.494	78.67	236.8	5178	578.1	36.93	0.589	3.679	19.89	12.61	19.79
MMRIFP-TA014S2c2	1.44	73.99	236.1	4845	373.5	34.57	0.601	3.447	16.45	11.95	19.15
MMRIFP-TA014S2c3	NA	NA	NA	NA	NA	NA	NA	NA	NA	NA	NA
MMRIUB014B	NA	65.98	20.85	4557	60.76	34.73	0.173	2.844	10.75	9.999	13.47
MMRIUB015B	NA	63.8	12.51	2655	30.55	20.52	ND	2.119	8.389	5.407	9.618
MMRIUB016B	1.274	66.6	40.6	3957	275.6	20.09	0.348	2.904	13.58	9.034	14.72
MMRIUB017B	1.385	68.21	51.05	4833	283.4	25.93	0.615	2.368	13.89	11.08	13.17
MMRIBB018S2	1.569	68.06	109.3	5043	815.1	73.89	0.363	3.729	19.47	11.11	28.18
MMRIUB019S2	1.745	69.52	29.34	5043	198.9	52.07	0.27	4.016	10.7	10.56	23.75
MMRIBG020S	1.27	70.91	3.768	4108	1.018	79.37	0.265	3.853	9.232	7.819	12.54

APPENDIX F: OTHER DATA

Table F-1. Non-metal chemistry data for lysimeter samples.

	pH	TOC (mg/L)	TDS (mg/L)	Ca (mg/L)	K (mg/L)	Mg (mg/L)	Na (mg/L)	PO4-P (mg/L)	ORP (mv)	Cond (umhos/cm)
Min	5.86	2.4	96	6.2	1.8	1.1	3.9	7.3	185	95
Max	7.66	29	650	127	5.2	12.7	47.2	71.9	271	406
Median	6.70	15	210	52.6	2.8	3.4	9.1	42.3	213	215
Mean		14	260	59.5	3.1	5.4	21.0	37.9	224	218

Table F-2. Metal concentrations (mg/L) after filtration for lysimeter MMR-21 sampled on 21 December 2005.

Filter size	Pb	Cr	Cu	Ni	Zn	Fe	Mn	Mo	V	Sb	W	As
0.45 micron	<0.05	1.60	0.09	<0.05	0.72	0.26	0.15	<0.05	<0.05	<0.05	388	0.08
0.22 micron	<0.05	1.54	0.09	<0.05	0.72	0.24	0.14	<0.05	<0.05	<0.05	382	0.08
100,000 MW	<0.05	1.51	0.09	<0.05	0.76	0.24	0.14	<0.05	<0.05	<0.05	371	0.08
30,000 MW	<0.05	1.48	0.09	<0.05	0.77	0.24	0.14	<0.05	<0.05	<0.05	373	0.08
10,000 MW	<0.05	1.54	0.09	<0.05	0.72	0.25	0.14	<0.05	<0.05	<0.05	381	0.08
3,000 MW	<0.05	1.54	0.09	<0.05	0.71	0.24	0.14	<0.05	<0.05	<0.05	381	0.08
MW Molecular weight												

Appendix G: LABORATORY TESTS

Digestion Efficiency Assessment

The only Performance Evaluation standard for tungsten tested was a National Institute of Standards and Technology (NIST) standard reference material #2710, Montana Soil, which was digested and analyzed using the modified and the standard methods. The non-certified tungsten concentration of the NIST standard soil is 93 mg/kg. This value was obtained by NIST using neutron activation analysis, which involves no extraction. Our results for the standard extraction method without the addition of phosphoric acid yielded an average tungsten concentration of 63 mg/kg, whereas the modified method with phosphoric acid resulted in a mean value of 163 mg/kg. The results using the modified digestion are higher than the non-certified value of 93 mg/kg tungsten. As presented in the QA/QC section, analysis of a second source tungsten standard yielded similar values, close to the known value. It is not clear why the tungsten values for the NIST standard differ markedly between the two digestion methods, but we suspect a matrix affect issue. The NIST sample has high concentrations of many different metals, which could be interfering with the tungsten analysis. We are in the process of acquiring additional standards and will be redoing these experiments and having the samples analyzed by two separate laboratories.

Sample Processing

To evaluate the sample processing protocol and the reproducibility of the digestion and analytical methods, a series of experiments was conducted with a single soil sample. The sample MMRBT2531a was a 100-increment sample collected from the B Range berm face between firing lanes 25 and 31 at a depth of 0 to 5 cm. The sample was sieved using a 2-mm sieve and split into < 2-mm and > 2-mm size fractions, which in turn were split into 12 approximately 200-g portions using a rotary splitter. Each of the 12 portions for both the < 2 and > 2 fractions were ground using the agate ball mill. Eight of the sample splits were then subsampled by taking 25 individual increments (0.02 g) to form a 0.5-g aliquot, which was then digested following the procedures described in the Methods section. The mean tungsten concentration for the < 2-mm size fraction of the eight

sample splits is 1,870 mg/kg, with a percent relative standard deviation (RSD) of 5.5% (Table G-1). The results suggest good reproducibility of the sample processing, subsampling, and analytical method. Thus, grinding appears to be a useful method to control sample error for the < 2-mm size fraction.

In contrast, the high RSD, 50%, for tungsten in the > 2-mm soil-size fraction indicates the procedures employed still resulted in significant sample error. The mean tungsten concentration of the > 2-mm size fraction is 3,700 mg/kg.

We digested and analyzed the < 2-mm and > 2-mm) size fractions of a sample to assess the total quantity of tungsten in the soil. The two soil-size fraction results (< 2 mm and > 2 mm) were mass weighted and used to calculate a mean soil tungsten concentration, 2,300 mg/kg. We found that the > 2-mm size fraction contained 34 percent of the total tungsten mass in the soil sample. We currently are not analyzing the > 2 -mm fraction because it cannot be easily ground or digested. The tungsten in this fraction appears to be in copper slugs that possibly are from a 0.50-cal round. We do not think this tungsten is coming from the tungsten/nylon bullets, but this will be explored more fully in the next phase of the tungsten study.

Digestion of > 2-mm Soil Fraction

Owing to the large relative standard deviation in the previous experiment (Table G-1), a series of experiments was conducted to determine the amount of tungsten associated with the > 2-mm soil size fraction. For this set of experiments, the entire sample was ground using the agate ball mill for 20 minutes at 360 rpm, and then ground a second time in approximately 50-g batches using the Planetary Micro Pulverisette Seven for 10 minutes at 650 rpm. Following this second grinding, the entire mass was recombined and manually mixed. When copper jacket material was present, it could not be ground to a uniform size because it had a tendency to flatten out. For the > 2-mm samples, three different approaches were taken regarding the subsampling and digestion.

Table G-1. Tungsten replicate results for Sample T2531A.

T2531a	Soil mass > 2 mm (kg)	Soil mass < 2 mm (kg)	Concentration > 2 mm (mg/kg)	Concentration < 2 mm (mg/kg)	W mass > 2 mm (mg)	W mass < 2 mm (mg)	Total W mass (mg)	Percent > 2 mm	Percent < 2 mm	Total W concentration (mg/kg)
b	0.03	0.11	4,630	1,900	126	207	333	38	62	2,450
c	0.02	0.11	2,370	1,740	59	195	254	23	77	1,850
d	0.03	0.11	3,030	1,790	83	202	285	29	71	2,030
e	0.02	0.10	2,390	1,900	44	197	241	18	82	1,970
f	0.03	0.13	2,700	1,880	70	239	309	23	77	2,020
g	0.05	0.12	7,090	1,810	390	221	610	64	36	3,450
h	0.03	0.12	n/a	2,080		243				
i	0.03	0.11	n/a	1,840		209				
		Mean	3,700	1870						2,300
		Std dev	1,860	103						601
		RSD (%)	50	5.5						26
			Average of triplicates			Single result				

First Experiment

The first experiment involved collecting three 50-g subsamples from MMRBMB022S1 for digestion using a hot plate with nitric and phosphoric acids following the Modified EPA Method 3050B. Modifications in scale were made regarding the larger soil and reagent amounts. A ratio of 800 mL of HNO_3 and 200 mL of H_3PO_4 for every 50 g of solid to be digested was added to the Teflon digestion beaker. Then the sample was heated for four hours at 115°C ± 5°C. Following cooldown, 10 mL of the digested sample was filtered and brought to a volume of 100 mL. The results indicated a mean tungsten concentration of 8,180 mg/kg. In comparison, the concentration in the < 2-mm size fraction of sample MMRBMB022S1 was 1,530 mg/kg.

For the remaining sample, MMRBMB022S1, the entire > 2-mm sample mass, 659 g, was digested in 17 batches. The batches consisted of eleven 50-g aliquots and six aliquots of smaller mass (41.5, 15, and 7.5 g). These 17 individual batches were not fully homogenized because the entire sample was going to be digested. This resulted in variability in concentrations within the 17 digestates, but the focus was on the total mass of tungsten. The results yielded a total tungsten mass of 4.87 g in the > 2-mm fraction, equating to a concentration of 7,390 mg/kg.

Second Experiment

In this experiment, five soil samples were sieved into < 2- and > 2-mm size fractions, with each size fraction ground separately. Following grinding, each sample was passed through a 150-µm sieve, and the portion of the sample that did not pass through the sieve was digested in its entirety. The portion of each sample that passed through the sieve was mixed, subsampled, and analyzed. Three subsamples were analyzed from MMRITR002S1, and one subsample each from MMRILB003S3, MMRBTR035S3, and MMRCTR006S2 (Table G-2). The results indicate that > 96% of the tungsten in the > 2-mm soil fraction is found in the < 150-µm size portion. This result indicates grinding is effective in reducing the tungsten particle size to < 150 µm. Results from replicates of MMRCMB002S1 indicate good reproducibility of the ground < 150-µm material. However, when contrasting the total tungsten concentration in the > 2-mm soil-size fraction with the < 2-mm size fraction, a significant portion of the tungsten is retained in the > 2-mm size fraction (Table G-3).

The percentage of tungsten in the < 2-mm soil size fraction varies from 22 to 75 percent in the six samples studied.

Table G-2. Results for the > 2-mm size fraction of samples MMRCMB002S1, MRITR002S1, MMRILB003S3, MMRBTR035S3, and MMRCTR006S2.

	Fraction (µm)	Digested mass (g)	Sample mass (g)	Tungsten mass (g)	Tungsten concentration > 2 mm (mg/kg)	Tungsten concentration < 2 mm (mg/kg)
MMRCMB002S1						
Rep 1	< 150	50	405.01		16,500	
Rep 2	< 150	50	405.01		15,20	
Rep 3	< 150	50	405.01		15,100	
Mean					15,600	
Standard deviation (mg/kg)					812	
RSD (%)					5	
Rep 1	> 150	41.9	41.9	0.09	2,340	
Sum			446.9	6.41		
Combined mean					14,300	1,300
MMRITR002S1						
	< 150	50	394.8	0.11	271	
	> 150	8.3	8.3	0.004	455	
Sum			403.1	0.11		
Combined mean					273	193
MMRILB003S3						
	< 150	50	347.7	2.53	7,280	
	> 150	11.29	11.2	0.002	1,900	
Sum			359.0	2.55		
Combined mean					7,102	369
MMRBTR035S3						
	< 150	50	343.3	0.76	2,200	
	> 150	1.5	1.5	0.002	1,240	
Sum			344.8	0.76		
Combined mean					2,200	864
MMRCTR006S2						
	< 150	50	274.0	0.41	1,510	
	> 150	5	2.2	0.001	639	
Sum			276.2	0.42		
Combined mean					1,520	339

Table G-3. Percentage of tungsten by soil size fraction.

Sample ID	Location	Total soil sample mass (g)	< 2-mm soil mass (g)	> 2-mm soil mass (g)	% soil < 2 mm	% soil > 2 mm	W conc. < 2 mm (mg/kg)	W conc. > 2 mm (mg/kg)	Mass W < 2 mm (g)	W mass > 2 mm (g)	% W in < 2 mm relative to total W mass	% W in > 2 mm relative to total W mass
BMB022	BP	3714	2749	659	81	19	1,530	7,390	4.2	4.9	46	54
CMB002	BP	3731	2969	447	87	13	1,310	14,300	3.9	6.4	38	62
ILB003	Slough	2898	2275	359	86	14	369	7,100	0.8	2.6	25	75
ITR002	Trough	2702	2066	403	84	16	193	273	0.4	0.1	78	22
BTR035	Trough	3904	3186	345	90	10	864	2,200	2.8	0.8	78	22
CTR006	Trough	3018	2516	276	90	10	339	1,520	0.9	0.4	67	33

Third Experiment

In the third experiment, surface samples from a depth of 0 to 2.5 cm for the primary berm face at B and I Ranges were analyzed by Northern Arizona University to explore the recovery procedures of tungsten in the > 2-mm soil fraction. These samples were taken in a manner as to obtain a reasonable grab sample representation of the > 2-mm material present in the berm soils. The samples were sonicated in water to remove small tungsten particles from the surfaces of the > 2-mm material; while this did remove some tungsten, it left behind large quantities of tungsten. A tungsten mass balance was prepared for the samples from B and I Ranges through analysis of the < 2-mm material, the washed "fines" removed by sonication, and several categories of > 2-mm objects (twigs, rocks, steel penetrators, copper penetrators and jackets, blue plastic cones, and other plastics). The tungsten found in some of the > 2-mm object categories, such as the rocks and twigs, may have been artificially inflated as a result of the sonication process, which may have driven fine tungsten-rich particles into pores.

The analysis of four splits obtained using a riffle splitter from each berm was performed by leaching 50 g of the < 2-mm fraction and the total portion of > 2-mm material. These results reveal large variance in the tungsten concentrations of the > 2-mm material; the > 2-mm material consistently contains higher tungsten concentrations than the < 2-mm material, and cannot be neglected in determining the total concentration and inventory of tungsten in the soil.

Surface material samples from berms at B and I Ranges were sieved using a 2-mm stainless-steel sieve. The material passing through the sieve (< 2 mm) was analyzed by leaching three replicate nominal 50-g subsamples from the material from each berm. The analytical procedure followed was that described for NAU. The entire portion of recovered > 2-mm material from each berm was divided into two 750-mL glass jars per berm with each jar filled with 500 mL of deionized water. The materials were sonicated in an Aquasonic Model P250D sonic bath (VWR Scientific Products) for two hours. The sonicated > 2-mm material was collected using a 2-mm sieve, oven-dried at 85°C, and weighed. The weight loss was assumed to represent fines cleaned off the > 2-mm material. A portion of the < 2-mm fines was collected by decantation and subsequently evaporated to obtain a solid residue. The solid residue was analyzed as described earlier, with the exception that two replicate 2-g subsamples were analyzed from the

fines of each berm. The sonicated > 2-mm material from each berm was manually separated into a variety of object classes as follows: twigs, copper jacket fragments, blue plastic cone-shaped objects, steel penetrators, copper penetrators and pieces thereof, rocks, and other material. All object classes were weighed. After weighing, samples were transferred to glass jars or large polypropylene pans.

Then, a 50-g nominal mass of oven-dried sample (< 2 mm, of 15 to 20 increments) was weighed into a 125-mL alumina dish and was dry-ashed at 600°C for two hours. The ashed material was transferred to a 500-mL Pyrex bottle equipped with a ground glass stopper; 200 mL of reagent-grade HNO_3 (70% aqueous solution) and 50 mL of reagent-grade H_3PO_4 (85% aqueous solution) were added. The mixtures were permitted to react for about 10 minutes at room temperature, then the containers were loosely capped and the mixtures heated in an air oven at 85°C for four hours with occasional agitation followed by venting to remove accumulated NO_2 gas, then were quantitatively transferred to a 2000-mL volumetric flask. The volume was adjusted to the mark with deionized water. The mixtures were thoroughly shaken, then allowed to stand so that the undissolved residue settled. *Note:* It is expected that a 500- or 1000-mL fluorinated ethylene-propylene bottle could be used instead of the Pyrex bottle. A minimum of three blanks per batch was prepared. The large polypropylene pans were used for the copper metallic phases because of copious formation of NO_2 and H_2. After subsidence of gas evolution, the remaining mixtures were placed in glass bottles and heated for approximately 16 hours in an 80°C air oven. After completion of the heating steps, the mixtures were diluted to either 1- or 2-L final volume. The steel penetrators and twigs were completely dissolved by this procedure. The undissolved portions of the copper slugs, copper jacket fragments, and rocks were recovered and rinsed. The following assumptions were made for the mass balance calculation:

- Tungsten was completely leached from the < 2-mm material by the HNO_3-H_3PO_4 procedure;
- Tungsten was completely dissolved from the steel penetrators and the twigs since their dissolution was complete;
- Tungsten was completely leached from the rocks (> 2 mm) by the HNO_3-H_3PO_4 procedure; and

- Dissolution of the copper jacket fragments and copper penetrators was not complete, so the undissolved portions were collected and weighed. It was assumed that the dissolution of tungsten was proportional to the mass actually dissolved.

The leach solutions obtained from the procedures above were analyzed by ICP/MS as described earlier. The results (Tables G-4 and G-5) reveal the following:

Sonication, via the apparatus used, was ineffective in terms of complete removal of particulate tungsten from the > 2-mm material, and may have exacerbated the situation by causing very fine tungsten-bearing particles to penetrate into porous surfaces of > 2-mm material. It is believed that this process was responsible for the rather high concentrations and amounts of tungsten found in object classes such as the twigs and rocks.

High concentrations of tungsten found in the fine washes indicate that tungsten-rich particles were adhering to > 2-mm material. These particles and the > 2-mm material must be taken into account for a complete analysis and inventory of tungsten in the whole soil.

In addition to the tungsten 5.56-mm rounds, other complete and incomplete projectiles were found on the ranges. Two items of interest were what appeared to be slugs composed of some sort of copper alloy (Fig. G-1). These slugs had a greenish color and friable texture. “Copper slugs” (identity unknown) from B Range contained the anticipated rather low concentrations of tungsten; however, the copper slugs (believed to be 0.50-cal rounds) from I Range contained apparently very high concentrations of tungsten that greatly affected the mass balance of tungsten.

Further investigations were performed using the remaining, undissolved fractions of the copper slugs from both berms. It was determined that there were apparently two types of copper slugs, both of which had an oxidized blue-green copper color on the surface. However, after leaching with acid, one type of copper slug with negligible tungsten content (apparently comprising all slugs on B Range and some of the slugs on I Range) still had an oxidized blue-green copper color, while another type had a gray-black color (found only on I Range). The “pure copper” slugs could be fractured with a hammer impact to reveal a bright metallic copper interior. The “gray-black slug” could be fractured with a hammer to

reveal a dark red-brown copper color, evidently arising from an alloy or pressed powder admixture of copper and other metals.

Table G-4. Fraction of tungsten for Bravo Range >2-mm soil fraction.

Fraction	Fraction mass (g)	Tungsten (mg/kg)	Tungsten mass (g)
< 2 mm	1,447	2,202*	3.19
Fine washes	55.7	5,940†	0.33
Cu jackets	61.2	7,170	0.44
Cu penetrators	69.5	299	0.02
Steel penetrators	18.0	1,490	0.02
Rocks	655	1,390	0.91
Twigs	3.4	12,800	0.04
Blue cones	2.8	190	< 0.001
Other (plastic)	0.06	1,870	< 0.001

* Average of three replicates; individual trials = 2,274, 2,177, 2,155 mg/kg.
† Average of two replicates; individual trials = 6,520, 5,360 mg/kg.

Table G-5. Fraction of tungsten for India Range > 2-mm soil fraction.

Fraction	Fraction mass (g)	Tungsten (mg/kg)	Tungsten mass (g)
–2 mm	1,732	1,050*	1.8
Fine washes	28.8	6,440†	0.2
Cu jackets	65.1	11,500	0.8
Cu penetrators	153	140,000	21
Steel penetrators	11.8	5,750	0.07
Rocks	696	879	0.6
Twigs	2.6	66,600	0.2
Blue cones	1.0	95	< 0.001

* Average of three replicates; individual trials = 1105, 1041, 1005 mg/kg.
† Average of two replicates; individual trials = 7510, 6330 mg/kg.

Figure G-1. Unidentified copper slug.

Three pieces of the pure copper slugs from B Range, two pieces of pure copper slugs from I Range, and one piece of gray-black penetrator from I Range were analyzed. The gray-black penetrator proved very intractable to dissolve; simple treatment with acid mixtures such as HNO_3-H_3PO_4 or HNO_3-HCl easily dissolved the copper but left behind much black residue (presumably tungsten and/or other constituents). A fusion with KOH and $KClO_3$ was developed to dissolve the gray-black slug pieces. An approximately 100-mg nominal mass of pulverized gray-black penetrator was weighed into a 40-mL Pyrex VOA bottle and was mixed with 1.0 g KOH and 0.1 g $KClO_3$. The mixture was fused at 600°C for 15 minutes. The fused material was removed from the furnace, cooled briefly to the point of solidification, and then quenched with 20 mL hot deionized water. The bottle was capped and shaken to dislodge solids, forming a green or olive-colored sludge. The sludge was abruptly poured into 20 mL of hot 8 M HNO_3, forming a clear, light blue-green solution, which was diluted 10,000 times prior to ICP/MS analysis. The following results were obtained:

- B Range pure copper penetrator, piece 1, < 50 mg/kg tungsten;
- B Range pure copper penetrator, piece 2, < 50 mg/kg tungsten;
- B Range pure copper penetrator, piece 3, < 50 mg/kg tungsten;
- I Range pure copper penetrator, piece 2, 1,680 mg/kg tungsten;
- I Range pure copper penetrator, piece 3, 1,700 mg/kg tungsten; and
- I Range gray-black penetrator, piece 1, 226,000 mg/kg tungsten.

These results confirm that I Range berm soils contained an important tungsten-rich metallic phase in the > 2-mm material. Given that difficulties were encountered in the complete dissolution of this phase with HNO_3-H_3PO_4 mixtures, the total recovery of tungsten from small pieces of this phase (where present) needs to be further studied.

A second assessment was conducted by NAU to ascertain the representativeness of the > 2-mm soil portion during sample collection and sample preparation. Twelve large sample bags of soil material collected across the B and I Range berm faces were collected with the bags labeled A–L, respectively. From each berm, four of the twelve bags were selected for analysis (A, D, G, and K). The entire content of the bag was sieved using a 2-mm stainless-steel sieve; the < 2-mm and > 2-mm fractions were weighed. One nominal 50-g subsample of < 2-mm soil was analyzed from each of the four splits from each range (Table G-6). The > 2-mm riffle split fractions from B and I Range were analyzed using a modification of the procedure discussed previously; the entire mass of the > 2-mm material was transferred to a 250-mL Pyrex jar, and was leached with 100 mL HNO_3 and 25 mL H_3PO_4, being diluted to a final volume of 1,000 mL. No dry-ashing was performed.

Table G-6. Tungsten sample result reproducibility.

Range	Split	< 2-mm mass (g)	< 2-mm concentration (mg/kg)	> 2-mm mass (g)	> 2-mm concentration (mg/kg)	Total tungsten (mg/kg)	Comments
B	A	228	1,840	47	3,480	2,130	3 steel penetrators, Cu jacket pieces
B	D	226	1,880	40	2,850	2,030	1 steel penetrator, Cu jacket pieces
B	G	233	1,660	43	2,300	1,760	1 steel penetrator, Cu jacket pieces; one Cu penetrator
B	K	241	1,890	38	1,680	1,880	1 steel penetrator, Cu jacket pieces
I	A	189	466	28	1,680	621	2 small pieces of pure Cu penetrator
I	D	191	452	29	2,770	753	Cu jacket pieces; gray-black penetrator pieces
I	G	199	446	30	2,540	720	Cu jacket piece; gray black penetrator piece
I	K	191	460	25	1,550	585	Cu jacket piece; gray black penetrator piece

The results generally indicate complex issues associated with the sub-sampling and representativeness of the > 2-mm material. The mass balance presented in Tables G-5 and G-7 illustrates that the > 2-mm material cannot be neglected in the analysis, and actually represents a reservoir of tungsten-rich particles that must be included in a meaningful analysis. The most important phases, from the mass balance standpoint, are the copper jacket fragments and the gray-black variety of copper-containing penetrators as found exclusively on the berm face at I Range. The results shown for Table G-7 directly address the representativeness of the > 2-mm material and seem to indicate that the mass of the > 2-mm material analyzed was too low. The tungsten concentrations vary by a factor of nearly twofold for four replicates (Table G-7). Because the > 2-mm material happens to have higher tungsten concentrations than the < 2-mm material, the variance in > 2-mm concentrations has a strong

effect on the weighted concentrations. It may be possible to produce a satisfactory analysis by sieving a larger subsample (2 to 3 kg or more), then separately analyzing approximately 50 g of the < 2-mm material and leaching the entire mass (i.e., several hundred g) of > 2-mm material. The resulting concentrations could then be combined in a table similar to Table G-3. This is what was done in the experiments described in Table G-1.

Unfortunately, neither of the ERDC laboratories is equipped with grinding equipment to accommodate the > 2-mm size fraction and the large sample mass. Typically, our respective laboratories can handle 400 g of material for grinding. CRREL does have a puck grinding mill with metal bowls and puck, and these materials will be assessed later for their suitability in grinding samples for metals analysis. The larger soil materials greatly reduce the lifespan of our current grinding apparatus. The ideal solution would be to utilize a non-metallic jaw crusher as the first grinding step, followed by the ball or puck grinding mills using agate materials. Although commercial laboratories exist to support the mining industry, these laboratories are not set up to deal with environmental samples. These labs are equipped to handle and analyze for percent levels of metals but not environmental quantities of ppm or ppb. Also, the existing environmental laboratories in the United States are not equipped to grind soil samples. In contrast, grinding of soil samples prior to metals analysis is a common and expected practice in the European Union. Assuming the grinding issues can be addressed, processing large quantities of samples for acid digestion using 50 g of material is less than ideal due to the large quantities of nitric and phosphoric acids used. As will be discussed later, a number of alternative digestion approaches were explored but none was found to be as effective as the nitric/phosphoric acid mixture. Consequently, only a few soil samples were analyzed to quantify the amount of tungsten in the > 2 mm soil-size portion.

Table G-7. Evaluation of tungsten recovery.

Sample	Preparation method	Result W (µg/g)
Blank 1	Nitric-phosphoric acids, 2 g	2.0
Blank 2	Nitric-phosphoric acids, 2 g	ND
Blank 3	Nitric-phosphoric acids, 2 g	6.8
Blank 1	Nitric-phosphoric acids, 50 g	ND
Blank 2	Nitric-phosphoric acids, 50 g	ND
Blank 3	Nitric-phosphoric acids, 50 g	0.5
Rep 1 a	Nitric-phosphoric acids, 2 g	2,119 ± 18*
Rep 1 b	Nitric-phosphoric acids, 2 g	2,306 ± 30 (2,141)
Rep 1 a	Nitric-phosphoric acids, 2 g	2,016 ± 13
Rep 2 a	Nitric-phosphoric acids, 2 g	2,197 ± 8
Rep 2 b	Nitric-phosphoric acids, 2 g	2,416 ± 10 (2,252)
Rep 2 a	Nitric-phosphoric acids, 2 g	2,144 ± 22
Rep 4 a	Nitric-phosphoric acids, 2 g	1,940 ± 23
Rep 4 b	Nitric-phosphoric acids, 2 g	2,207 ± 51 (2,018)
Rep 4 a	Nitric-phosphoric acids, 2 g	1,909 ± 15
Rep 1 a	Nitric-phosphoric acids, 50 g	2,006 ± 5*
Rep 1 b	Nitric-phosphoric acids, 50 g	1,920 ± 9 (1,963)
Rep 2 a	Nitric-phosphoric acids, 50 g	2,034 ± 4
Rep 2 b	Nitric-phosphoric acids, 50 g	2,115 ± 15 (2,075)
Rep 4 a	Nitric-phosphoric acids, 50 g	2,035 ± 20
Rep 4 b	Nitric-phosphoric acids, 50 g	2,073 ± 5 (2,054)
Blank 1	Pyrosulfate fusion, 2 g	ND
Blank 2	Pyrosulfate fusion, 2 g	ND
Blank 3	Pyrosulfate fusion, 2 g	ND
Deformed copper jackets	Pyrosulfate fusion (2.578 g)	483 ± 4
Orange polymer	Pyrosulfate fusion (0.050 g)	843 ± 98
Copper penetrator	Pyrosulfate fusion (1.691 g)	15 ± 1
Steel penetrators	Pyrosulfate fusion (1.275 g)	1,827 ± 24
Stones, dirt embedded	Pyrosulfate fusion (1.197 g)	722 ± 8

* The uncertainties reflect the reproducibility (± one standard deviation) for the ICP/MS analysis of a single sample solution.

Note Values in parentheses in the tungsten concentration column represent the average of three samples.

Alternate Digestion Approaches

As the preceding section indicates, a sizable portion of the tungsten is associated with the < 2-mm size fraction, and the current digestion procedures are unsuitable for treating this material. Modifications made to EPA Method 3051 by ERDC-EL were tested by sending soil samples collected from the Camp Edwards small arms firing range berms to NAU. These soils were of a sandy constituency and contained foreign material, mainly metal fragments. The use of nitric acid with phosphoric acid was investigated, and this procedure was compared to a fusion with potassium pyrosulfate. The nitric-phosphoric procedure was found to be suitable for processing samples of small (2 g) or large (50 g) size. The potassium pyrosulfate procedure yielded systematically lower results, most likely because of problems with stabilizing tungsten in the resulting aqueous solution.

For each of the three samples tested, approximately 150 g of material was present after oven-drying. Approximately 20 percent of the sample mass consisted of objects > 2 mm in approximate diameter; this material was manually removed using tweezers. The objects > 2 mm consisted of stones, twigs, metal fragments, and an orange polymer resembling wire insulation.

A 2-g nominal mass of oven-dried sample (< 2 mm, composed of 8 to 10 increments) was weighed into a 40-mL Pyrex vial and dry-ashed at 600°C for 30 minutes. The ashed material was transferred to a 125-mL fluorinated ethylene-propylene bottle; 8 mL of reagent-grade (70% aqueous solution) nitric acid (HNO_3) and 2 mL of reagent-grade (85% aqueous solution) phosphoric acid (H_3PO_4) were added. The mixtures were permitted to react for about 10 minutes at room temperature, then the containers were tightly capped and the mixtures were heated in an air oven at 85°C for 16 hours with occasional agitation. The mixtures were allowed to cool and were quantitatively transferred to 125-mL specimen cups; the volume was adjusted to 100 mL with deionized water. The mixtures were thoroughly shaken, then allowed to stand so the undissolved residue settled. Three sample replicates (Rep 1, 2, and 4) were prepared from the same sample material and digested individually (Table G-7). Each of the 2-g digested aliquots was analyzed twice. A minimum of three blanks per batch was prepared.

A potassium pyrosulfate fusion procedure was expected to dissolve more consistently and aggressively non-silica refractory oxides and metals. A 2.0-g nominal mass of oven-dried sample (< 2 mm, composed of 8 to 10 increments) was weighed into a 40-mL Pyrex vial; the sample was mixed with 5.0 ± 0.1 g potassium pyrosulfate. The sample–flux mixtures were heated at 600° C for 10 to 30 minutes (until no further change was evident), then allowed to cool. Then, 20 mL of 8 M aqueous HNO_3 was added to each vial, which was capped and heated in an air oven at 85° C until dissolution of the flux was complete. The sample mixtures were quantitatively transferred to 125-mL specimen cups; the volume was adjusted to 100 mL with deionized water. The mixtures were thoroughly shaken, then allowed to stand so that the undissolved residue settled. A minimum of three blanks per batch was prepared.

The tungsten concentration results show the tungsten pyrosulfate procedure yielded approximately two to three times lower concentrations than the nitric-phosphoric procedure (Table G-7). Although this was not investigated in detail, it is suspected tungsten was present in a chemically unstable form following the acid workup of the potassium pyrosulfate flux. Therefore, this procedure is not recommended for future use, unless it can be modified to render tungsten chemically stable.

Field Sampling Approaches

At the start of the project, there was some question of the appropriate soil sampling approach to obtain a representative result. The typical approach utilized by most in the environmental industry is to collect discrete samples using a random biased or random non-biased approach. The biased approach is typically the result of the client or regulatory agencies indicating the exact location at which samples are to be taken. ERDC-CRREL's work with energetic residues suggested an alternate approach might yield more representative results since sampling and sample preparation errors result in the largest sources of decision error (Rasemann 2000, Jenkins et al. 1999). As the case with energetic residues, the residues deposited on a small arms range are in the form of solid metal fragments distributed in a heterogeneous fashion. There are two different types of heterogeneity, compositional and distributional, which can have an impact on sample error. Compositional heterogeneity can be controlled by collecting a multi-increment sample and distributional heterogeneity can be controlled by collecting sufficient sample mass. Therefore, a non-random probabilistic approach utilizing multiple-increments would seem

the best approach for determining the average tungsten soil concentration over a given decision unit. The probabilistic approach also allows for quantification of the associated sampling error.

In addition to an adequate number of increments, a sufficient mass of material is necessary to reduce the sample error. In this experiment, a large quantity of soil was obtained in the field from Camp Edwards and then 5.56-mm tungsten/nylon rounds were fired from an M16 into the soil contained in a 55-gallon drum until a concentration of 10,000 mg/kg was achieved (Larson 2006). The soil was mixed in a barrel roller, and after mixing, a 200- and 5,000-g sample were collected. Then, each of the samples was ground with the pulviserette. Three 0.5-g subsamples were collected from each sample container and digested. The mean tungsten values between the 200- and 5,000-g samples were similar; however, the RSD was lower for the 5,000 g sample (Table G-8). Clearly a large sample mass is necessary to overcome heterogeneity and reduce the sampling error. However, the use of multi-increments is necessary to obtain representative samples, as indicated by concentrations half of what is expected based on the mass loading.

Table G-8. Laboratory replicate analysis of a sample with different mass.

Sample	1	2	3	Mean	Std dev	RSD (%)
Mass (g)	200					
Tungsten (mg/kg)	5,470	4,190	4,310	4,660	708	15.2
Sample	1	2	3			
Mass (g)	5,000					
Tungsten (mg/kg)	4,540	4,470	4,640	4,550	85	1.9

Another question remaining is whether the size of the subsample digested has an impact on the sampling error. In this experiment, triplicate 0.5-, 1-, and 2-g subsamples were collected from the 5,000-g sample used in the earlier experiment. It does not appear that small increases in the mass of the digested subsample make a significant difference on the reproducibility of the results; all RSDs were 5.5% or less. However, as mentioned earlier, digestion masses of greater than 50 g appear to make a difference in obtaining representative results.

REPORT DOCUMENTATION PAGE

Form Approved
OMB No. 0704-0188

Public reporting burden for this collection of information is estimated to average 1 hour per response, including the time for reviewing instructions, searching existing data sources, gathering and maintaining the data needed, and completing and reviewing this collection of information. Send comments regarding this burden estimate or any other aspect of this collection of information, including suggestions for reducing this burden to Department of Defense, Washington Headquarters Services, Directorate for Information Operations and Reports (0704-0188), 1215 Jefferson Davis Highway, Suite 1204, Arlington, VA 22202-4302. Respondents should be aware that notwithstanding any other provision of law, no person shall be subject to any penalty for failing to comply with a collection of information if it does not display a currently valid OMB control number. **PLEASE DO NOT RETURN YOUR FORM TO THE ABOVE ADDRESS.**

1. REPORT DATE *(DD-MM-YYYY)*
August 2007

2. REPORT TYPE
Technical Report

3. DATES COVERED *(From - To)*

4. TITLE AND SUBTITLE
Fate and Transport of Tungsten
at Camp Edwards Small Arms Ranges

5a. CONTRACT NUMBER

5b. GRANT NUMBER

5c. PROGRAM ELEMENT NUMBER

6. AUTHOR(S)
Jay L. Clausen, Susan Taylor, Steven L. Larson, Anthony J. Bednar, Michael Ketterer, Chris S. Griggs, Dennis J. Lambert, Alan D. Hewitt, Charles A. Ramsey, Susan R. Bigl, Ronald N. Bailey, and Nancy M. Perron

5d. PROJECT NUMBER

5e. TASK NUMBER

5f. WORK UNIT NUMBER

7. PERFORMING ORGANIZATION NAME(S) AND ADDRESS(ES)
U.S. Army Engineer Research and Development Center
Cold Regions Research and Engineering Laboratory
72 Lyme Road
Hanover, New Hampshire 03755-1290

8. PERFORMING ORGANIZATION REPORT NUMBER
ERDC TR-07-5

9. SPONSORING / MONITORING AGENCY NAME(S) AND ADDRESS(ES)
US Army Environmental Command
5179 Hoadley Road
Aberdeen Proving Ground, Maryland 21010-5401

10. SPONSOR/MONITOR'S ACRONYM(S)

11. SPONSOR/MONITOR'S REPORT NUMBER(S)

12. DISTRIBUTION / AVAILABILITY STATEMENT
Approved for public release; distribution is unlimited.

Available from NTIS, Springfield, Virginia 22161.

13. SUPPLEMENTARY NOTES

14. ABSTRACT
Camp Edwards, Massachusetts, is the first of three military installations studied to assess the distribution of tungsten at small arms ranges. The study focused on three ranges at Camp Edwards. Tungsten was present in surface soils up to 2,080 mg/kg. Highest observed concentrations occurred in bullet pockets and soil eroded from the berm face. Concentrations decreased in surface soils away from the berm in the following order: berm face, trough, target, range floor, and firing point. Tungsten concentration in surface soils at the firing point is similar to background levels, i.e., 1.5 mg/kg. Tungsten levels in subsurface soils decreased with depth with an order of magnitude or more decrease in concentration within the top 25 cm. However, samples collected at 150 cm still had tungsten levels above background. Tension lysimeters, installed into the primary berm face and the trough area, had dissolved tungsten up to 400 mg/L. The 24 lysimeters did not exhibit consistent tungsten concentration trends and no trend was evident with depth, but concentration levels on the range were significantly elevated compared to background. Mean tungsten concentration for lysimeters installed in background locations was 0.09 mg/L and ranged between 0.011 to 0.169 mg/L. One of three monitoring wells sampled had tungsten. Concentrations varied from 0.0044 to 0.56 mg/L in a well screened at the water table, approximately 37 m below ground surface, and located 10 m downgradient of a primary berm face. A monitoring well located between ranges and several hundred meters downgradient had no reportable tungsten, nor did two background wells.

15. SUBJECT TERMS
Fate and transport, Lysimeters, Projectiles, Small arms ranges, Soil, Tungsten

16. SECURITY CLASSIFICATION OF:			17. LIMITATION OF ABSTRACT	18. NUMBER OF PAGES	19a. NAME OF RESPONSIBLE PERSON
a. REPORT	b. ABSTRACT	c. THIS PAGE			19b. TELEPHONE NUMBER *(include area code)*
U	U	U	U	122	

Standard Form 298 (Rev. 8-98)
Prescribed by ANSI Std. 239.18

DEPARTMENT OF THE ARMY
ENGINEER RESEARCH AND DEVELOPMENT CENTER, CORPS OF ENGINEERS
COLD REGIONS RESEARCH AND ENGINEERING LABORATORY, 72 LYME ROAD
HANOVER, NEW HAMPSHIRE 03755-1290

Official Business