Snow Guards for Metal Roofs

By Wayne Tobiasson, M.ASCE, James Buska, M.ASCE, and Alan Greatorex

This study was first published by the American Society of Civil Engineers for its 8th International Conference on Cold Regions Engineering in August 1996 and is reprinted by permission.

Abstract

Sliding snow and ice can damage property, kill people and overload lower roofs. In valleys, moving snow can roll the standing seams onto their side, violating the waterproofing seals within them.

Snow guards are used to hold snow on roofs. Some are attached mechanically while others are adhered to the metal roofing. One of the more successful adhesives requires weeks of above-freezing weather to cure properly and thus cannot be installed successfully during the colder portion of the year. Normal "hardware store" silicone adhesive we tried did not last long. Special, expensive, "neutral curing" silicone was moderately successful as a snow guard adhesive. Plastic and aluminum angle snow guards with a peel-and-stick butyl tape did not survive even one mild winter.

Set screws are used to attach several commercially-available snow guards to the standing seams of metal roofing. They fit some seams well; others, poorly. Self-tapping and self-drilling screws have been used with some success when installed with care. Stainless steel structural blind rivets performed well for us for two winters, but pulled out the third winter when heavier snow loads were present on the roofs.

Some damage to snow guards appears to be caused by workers using them for support when moving about on the roof.

Improved design guidelines, standards and performance criteria are needed for snow guards on metal roofs.

Introduction

Metal roofs are slippery. Where no obstructions exist on a metal roof and space is available below its eaves, snow on the roof is inclined to slide off. This can be advantageous since it reduces the risk of ice damming and resulting leaks and the intensity and duration of the snow load on the roof. In recently published ASCE Manual 7, "Minimum Design Loads for Buildings and Other Structures," (ASCE, 1995), the design snow load for a well-insulated roof with a slope of 27° (6:12) and an unobstructed slippery surface is only 66% of the load on a similar roof from which snow cannot slide.

Of course, the sliding of snow can also create problems. Plumbing stacks and other roof penetrations have been displaced or sheared off by sliding snow. Parapets have been displaced and in valleys, the standing seams of metal roofs have been rolled over and peeled apart, violating the waterproofing integrity of the roofing system.

Once it leaves a roof, falling snow may damage lower roofs when it impacts on them or later as heavier and heavier static loads accumulate on them. Falling snow and ice can also endanger people and property.

When the sliding of snow and ice on a metal roof cannot be tolerated, snow guards can be used to hold the snow and ice on the roof. Snow guards are obstructions attached to the roof to prevent snow from sliding.

Types of Snow Guards

Several snow guards that are attached to metal roofing with adhesive are shown in Figure 1. Adhesives range from stiff epoxy and hard setting plastic to flexi-

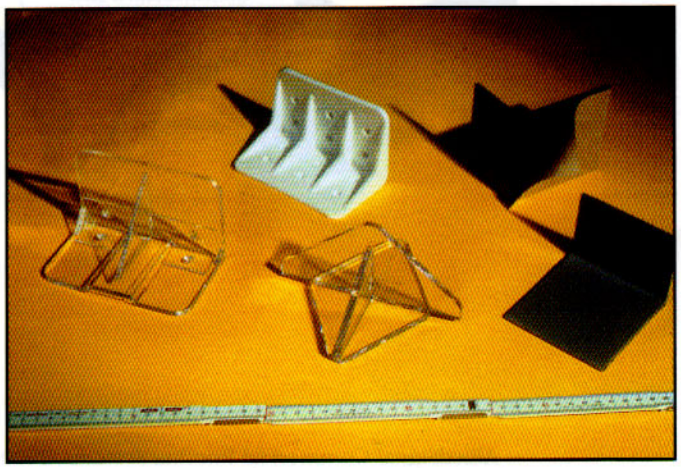

Figure 1: *Examples of adhesively-attached snow guards.*

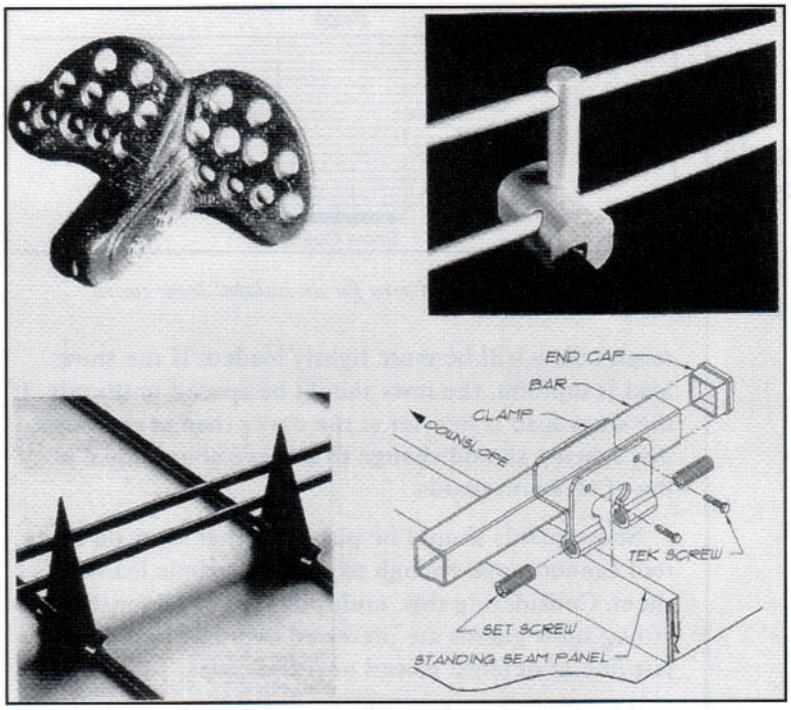

Figure 2: *Examples of mechanically-attached snow guards.*

ble silicone and butyl-based peel-and-stick tapes. In the few cases where load tests have been conducted on coated metal surfaces, failure loads vary between 180 and 320 kg. (400 and 700 lb.) per unit.

Other snow guards are mechanically attached to metal roofs. Most mechanically-attached snow guards are secured with nonpenetrating fasteners at or near the top of the standing seam to place them above the base of the metal pan where rain and snow meltwater flow down the roof. Stainless steel set screws (sometimes used in conjunction with cams) are designed to grip the seam. They fit some seams better than others. Failure loads up to 1,800 kg. (4,000 lb.) are reported for some of these devices. As shown in Figure 2, some of the mechanically-attached snow guards are individual units, but many are in the form of continuous fences.

Metal roofing needs to be free to expand and contract thermally (i.e., "to float") as its temperature changes. Snow guards that are mechanically attached by drilling through the metal roof and into the steel purlins below defeat this "floating" feature. Leaks are highly likely.

Loads on Snow Guards

Snow loads on roofs are defined in ASCE Manual 7 "Minimum Design Loads for Buildings and Other Structures" (ASCE, 1995), in various building codes and in other publications. Usually, the design load is an "unbalanced" snow load created on the leeward side of a sloping roof by winds. All snow loads are applied to the horizontal projection of roofs. Thus, when determining the total snow load on a sloping roof, the unit snow load should be multiplied by the horizontal projection of the downslope length of the roof. Manufacturers' literature for some snow guards incorrectly uses the sloping length of the roof when determining the total snow load. This has added an inadvertent factor of safety that may need to be recovered when the proper length is used to calculate loads on snow guards.

To determine the portion of the snow load that must be resisted by snow guards, the vertically-acting gravity load is resolved into two components, one parallel to and one perpendicular to the roof's surface. The component parallel to the roof is equal to the snow load times the sine of the roof slope angle. If friction along that slope is assumed to be zero, then the snow guards must resist the full component parallel to the roof. Figure 3 shows how this component varies with slope.

The assumption that friction is zero is appropriate since frictional resistance is near zero when the bottom of snow on a metal roof is at 0°C (32°F) and that snow contains some free water.

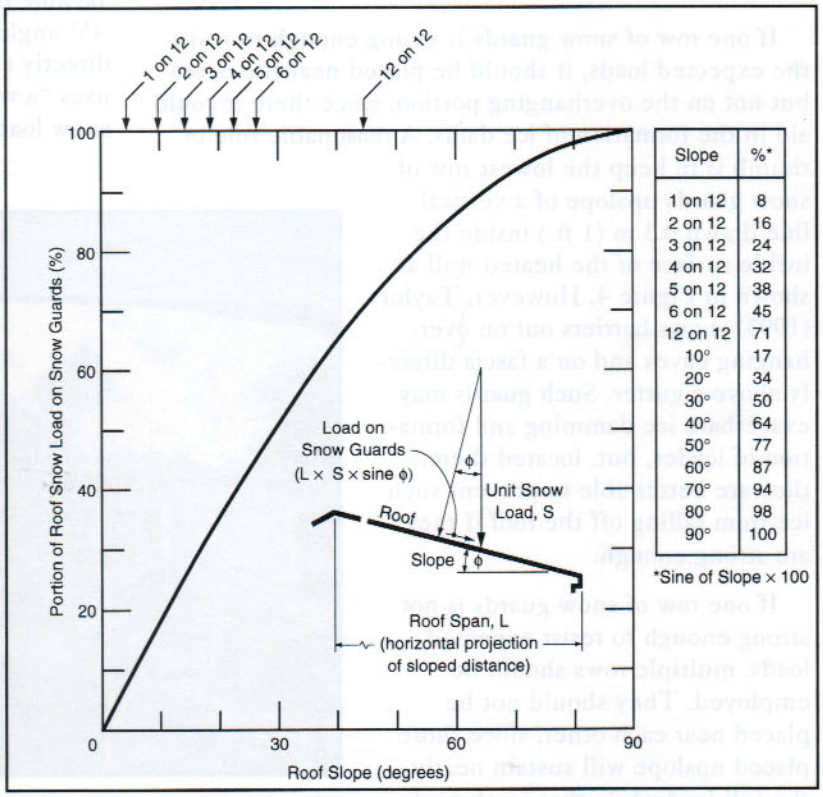

Slope	%*
1 on 12	8
2 on 12	16
3 on 12	24
4 on 12	32
5 on 12	38
6 on 12	45
12 on 12	71
10°	17
20°	34
30°	50
40°	64
50°	77
60°	87
70°	94
80°	98
90°	100

Figure 3: *Relationship between roof slope and the load on snow guards.*

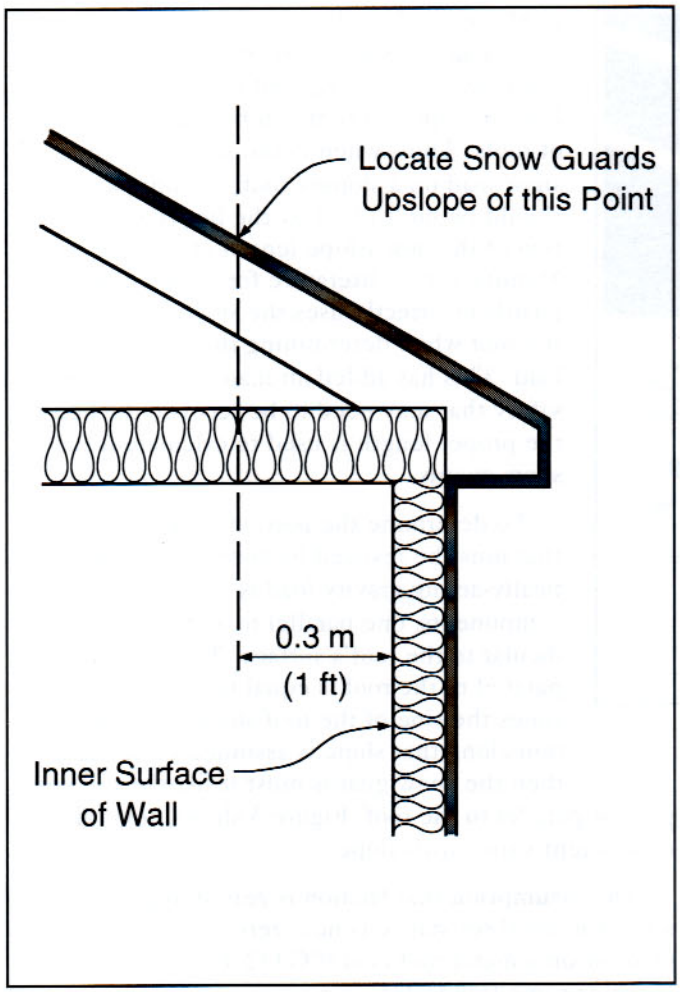

Figure 4: *Snow guards should be kept some distance above eaves to keep ice from accumulating on them.*

If one row of snow guards is strong enough to resist the expected loads, it should be placed near the eaves but not on the overhanging portion, since there it could aid in the formation of ice dams. A reasonable rule of thumb is to keep the lowest row of snow guards upslope of a vertical line drawn 0.3 m (1 ft.) inside the inside surface of the heated wall as shown in Figure 4. However, Taylor (1993) shows barriers out on overhanging eaves and on a fascia directly above a gutter. Such guards may exacerbate ice damming and formation of icicles, but, located there, they are better able to prevent such ice from falling off the roof if they are strong enough.

If one row of snow guards is not strong enough to resist expected loads, multiple rows should be employed. They should not be placed near each other, since those placed upslope will sustain nearly the full load while those a short distance below will be more lightly loaded. If the snow load is uniform, the rows should be spaced uniformly. If the snow load is heavier at the eaves than at the ridge, row spacing should change to achieve about equal loading of all snow guards.

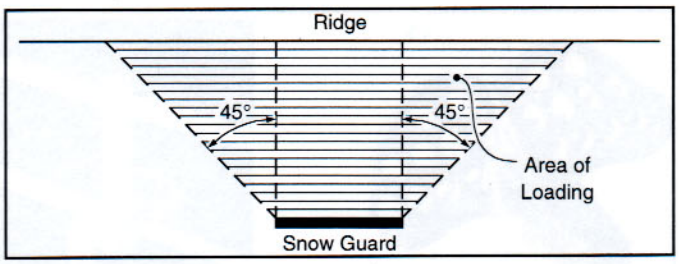

Figure 6: *Loaded area for an isolated snow guard.*

Snow guards should be placed so that snow on the roof cannot move enough to create dynamic loads on them. Considering this, multiple rows of reasonably strong snow guards are preferred over one very strong last line of defense placed near the eaves.

There are situations where snow guards are desired for only a portion of a metal roof. They might be installed just to prevent snow from falling at an entrance located below the eaves, to prevent snow from creeping down a valley, or to prevent snow from shearing off a plumbing vent that penetrates the roof. In these situations, snow alongside the guarded area is free to move, adding substantially to loads on the guards. Figure 5 illustrates this point. It shows a wedge of snow held in place by a single plumbing vent. To account for this effect, we assume that a series of snow guards must be able to sustain all the snow located within outward 45° angles upslope of their location plus all the snow directly above as shown in Figure 6. Paine (1989) also uses "a wedge about 45 degrees each side" to estimate snow loads on obstructions.

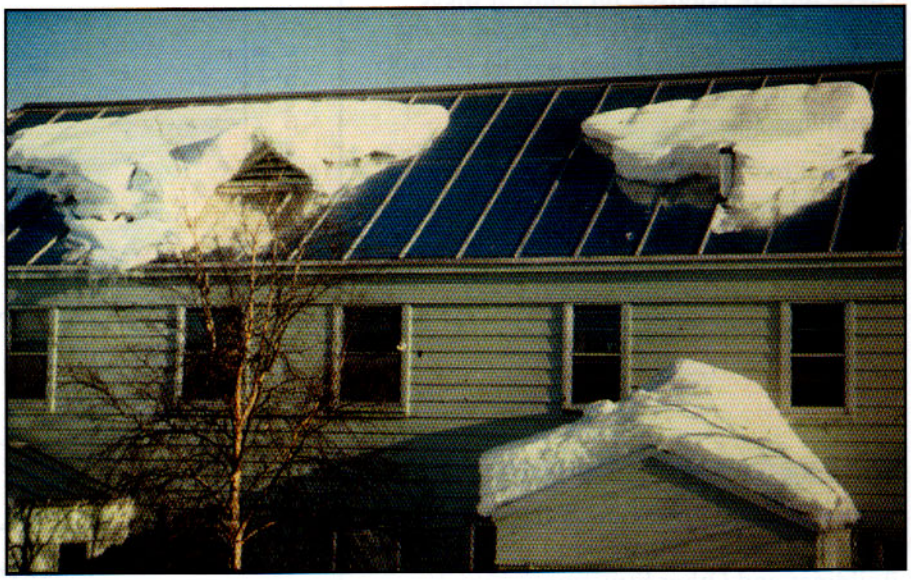

Figure 5: *A small object such as a plumbing vent can hold back a large wedge of snow.*

Figure 7: *Icicles will form on an overhanging, creeping mass of ice and snow.*

Studies of avalanche defense works (Katakawa et al., 1992) have shown that static loads at the ends of an object blocking the downslope movement of snow, which extends laterally some distance, can be almost twice the magnitude of the average load on the object. Thus the design load on any snow guard or snow guard fastener at the end of a row but not at the end of the roof (see Fig. 6) should be increased accordingly.

Little information is available on allowable loads on snow guards. Our studies suggest that the allowable load should be less than half of any reported failure test load. In high risk situations we would further reduce the allowable load.

When snow guards are added to an existing roof, snow loads on that roof will probably increase. It may be necessary to strengthen a roof before using snow guards to hold snow on it.

Tests at Fort Drum

Many new standing seam metal roofs at Fort Drum near Watertown, NY, suffered severe ice damming and icicle problems and leaks. We determined the primary cause to be hot attics (Tobiasson et al., 1994) and developed natural and mechanical attic ventilation improvements that have solved these problems. We investigated the use of electrical heat tapes to retain a meltwater flow path down a few problematic valleys that were difficult to keep cool and difficult to drain due to a constricting parapet wall (Tobiasson and Buska, 1993). Our electrical heater studies convinced us that without snow guards, the heaters can be ripped loose as snow creeps or slides. The iced bottom of creeping snow may extend 0.3 m (a foot) or more out over the fascia before it breaks off. Meltwater tends to follow the underside of such ice and snow cantilevers instead of flowing off the roof along the heat traced path. This results in the formation of dangerously large icicles at the end of the ice and snow cantilever as shown in Figure 7.

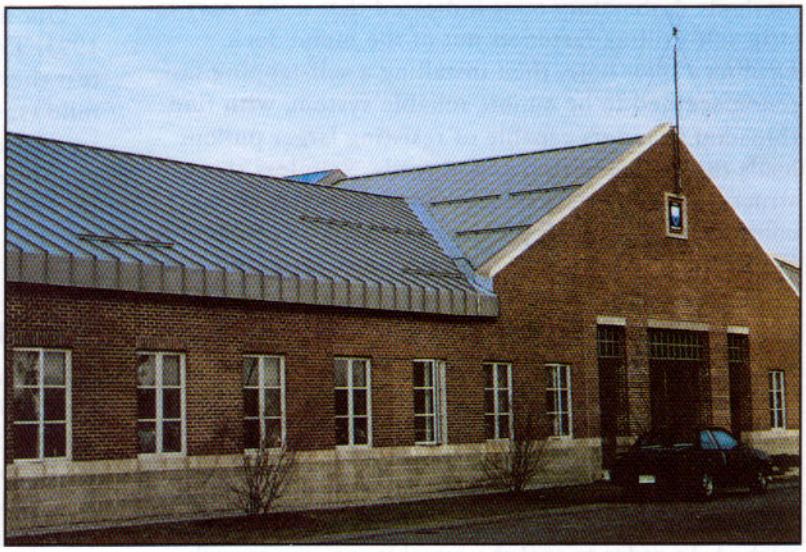

Figure 8: *Array of six aluminum angle snow guards used to protect a valley and, to the left, a single guard to study "worst case" loading.*

Figure 9: *Individual aluminum angle snow guards attached with butyl-based peal-and-stick adhesive.*

To solve these problems and develop a feel for the performance of snow guards, various types were installed on Ft. Drum roofs. The structural standing seam metal roof on these buildings had a flat-topped standing seam. That flat 20-mm-(0.8-in.-) wide surface provided excellent bearing for flat-bottomed snow guards and allowed us to

mechanically attach them to the roof at the standing seams that were spaced 0.51 m (20 in.) apart.

We made snow guards out of 3-mm- (1/8-in.-) thick aluminum angles with 51-mm- (2-in.-) long legs. Each one was 2.3 m (7.5 ft.) long, which allowed it to be supported on five seams with each end cantilevered out to the quarter point of the next pan. The gap in the middle of every fifth pan prevented the aluminum angles from inducing large lateral strains into the metal roofing system as their temperature changed.

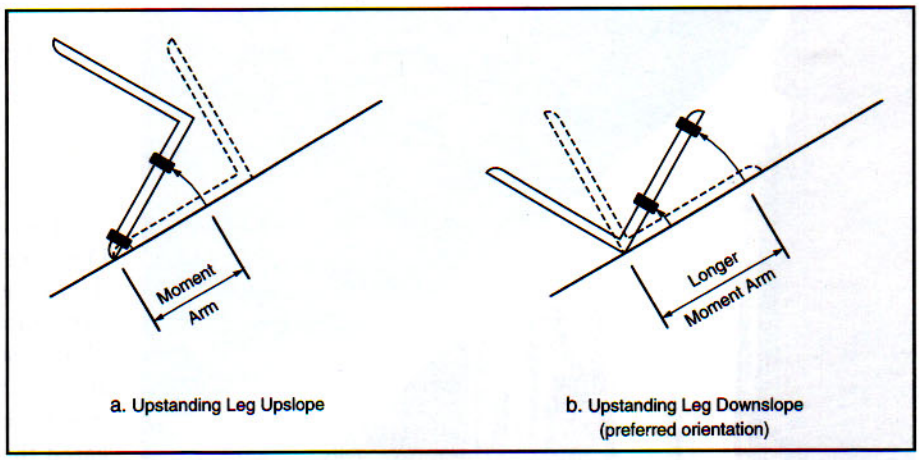

Figure 10: *Alternative orientations of the long aluminum angle snow guards. By placing the upstanding leg downslope, a stronger system was achieved.*

Figure 8 shows one valley protected by six such angle snow guards and a single angle guard along the eaves away from the valley.

We investigated various mechanical attachment methods. Laboratory tests indicated that it was easy to strip self-drilling fasteners out of the metal deck. Drilling a pilot hole, then installing a self-tapping fastener, seemed to be a more reliable system, with fine threaded fasteners capable of resisting larger pullout loads than those with coarse threads. Stainless steel structural blind rivets seemed an even better choice, considering their high pullout resistance and reliability. We decided to use them to attach most aluminum angle snow guards, but we installed some guards with self-tapping screws and others with self-drilling screws as a test. We drilled oversize holes in the aluminum angles before attaching them to the metal with either of the screw alternatives. A large, robust tool was purchased to set the rivets. The size of the rivet tool's head required us to place the rivet located near the upstanding leg of the angle farther away from that leg than we would have wished. In order to seal the attachment area at each bearing surface, a strip of butyl-based peel-and-stick tape was placed between the seam and the snow guard. Two fasteners were installed into each standing seam.

We also wished to evaluate snow guards attached with adhesive, but because we would be installing them in the late fall, our adhesive choices were limited to those that did not require many weeks of warm-weather curing before their first winter of use. We selected a snow guard made from 89-mm- (3 1/2-in.-) long pieces of 3-mm (1/8-in.-) thick, aluminum angle with unequal legs 64 mm (2 1/2-in.) and 102 mm (4 in.) long. A butyl-based peel-and-stick tape had been attached to the longer leg in the factory. We cleaned the painted metal roof with alcohol and applied a primer to the contact area before pealing and sticking the snow guard to the metal. These guards were attached to the base of the metal pans, not to the standing seams. Some are shown in Figure 9.

We also used the butyl tape to attach several clear plastic snow guards to one roof. Later in the test program we attached additional clear plastic snow guards with two kinds of silicone adhesive.

Our initial installations were made in November of 1993. The winter of 1993-94 provided plenty of snow to test these installations. The winter of 1994-95 was quite mild (snow load-wise) and did not provide much of a test. The winter of 1995-96 served to test the snow guards reasonably well.

Fort Drum Findings: Mechanically-attached Snow Guards

The aluminum angle snow guards mechanically attached to the seams of metal roofs have performed reasonably well but some problems have occurred. One of the lower angles shown in the Figure 8 valley was ripped off during the first winter. Our examination of it caused us to conclude that the butyl-based tape placed between the metal seam and the base of the guard was thick enough to prevent complete mushrooming of some rivets. We also determined that the pullout load on the upslope rivet could be reduced by placing the upstanding leg of the angle on its downslope side instead of on its upslope side. Figure 10 illustrates this point.

The failed angle was replaced with a new angle. It was turned so its upstanding leg was on its downslope side (i.e., as in Fig. 10b), and no butyl-based tape was installed between it and the metal roof. That snow guard has suffered no problems since. The other five angles in that array have remained in place.

Another valley was protected with a three-bar array configured like the three on the left side of the valley in Figure 8. Those bars were also attached with stainless steel structural blind rivets. Butyl-based tape was not used here. Periodic inspections have uncovered no signs of any loosening.

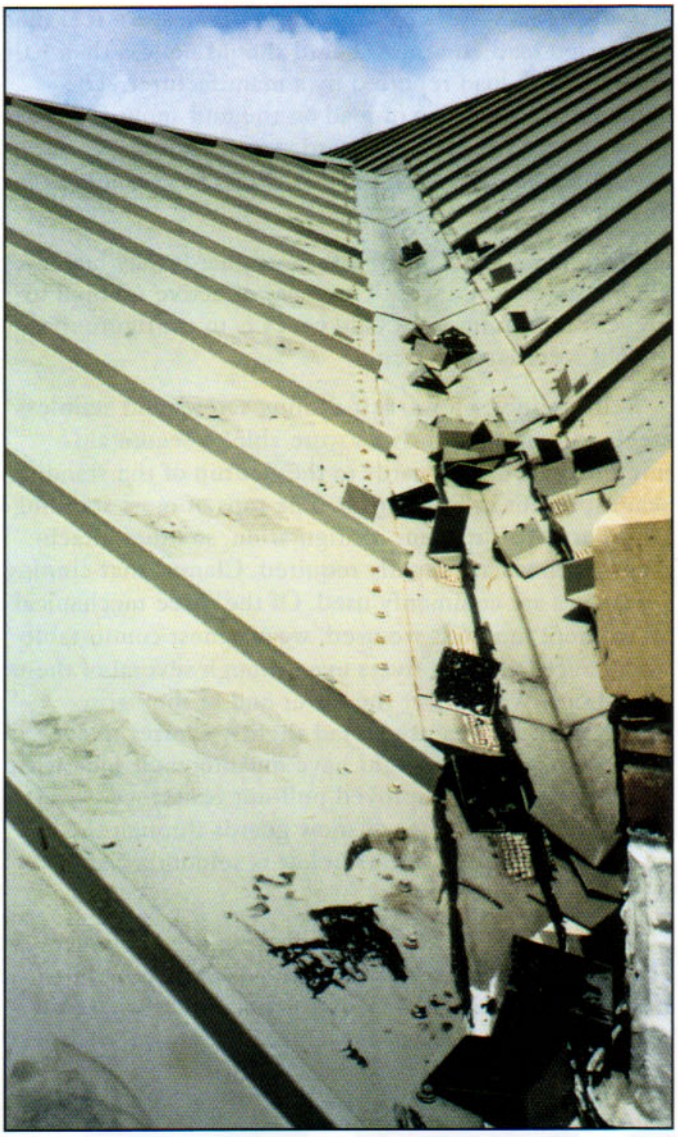

Figure 11: *All snow guards attached with butyl-based peal-and-stick adhesive failed the first year.*

Single angles were installed near the eaves on three roofs. One is shown in Figure 8. Each one is heavily loaded as is described in Figure 6. All were installed with their upstanding leg upslope (i.e., as shown in Fig. 10a). One of these bars was riveted as described above with butyl-based tape placed between it and the metal roof. One of its upslope rivets subsequently loosened. We believe that the butyl-based tape and its effect on rivet mushrooming were the probable cause. The loose rivet was removed with a grinder and a larger rivet installed. This bar failed during the 1995-96 winter. All rivets were pulled up through the metal roofing. One of the other single bars was installed with self-drilling screws and the third was installed with self-tapping screws. We had no trouble installing the self-drilling screws and none have become loose. We have noticed some slight corrosion on these screws and the neoprene washer of one is cracked, but those defects have not yet created any real problems. We stripped the metal roof when installing two of the self-tapping screws. Our laboratory study indicated that this would be more likely with self-drilling then self-tapping screws, but on the job, just the opposite happened. We removed those screws, squirted silicone sealant into the holes and reinserted the screws more to waterproof the holes than to provide much strength. This bar failed during the winter of 1995-96. The self-tapping screws pulled out of the metal roofing.

In October of 1994 several more bars were installed with rivets, each as a lone unit along the eaves or as singles or doubles above mechanical room doors. They were all installed with their upstanding leg downslope (i.e., as in Figure 10b) and no adhesive strip was placed below them. All but one of those bars remained tight during the 1994-95 winter. That bar had two rivets on one end loosen. We replaced those rivets with larger diameter rivets. Numerous shoe skid marks on the roof in this area suggest that these rivets were loosened by workers, not by snow.

During the winter of 1995-96, three of the seven bars installed in October of 1994 failed by having their rivets pull up through the metal roofing.

Fort Drum Findings: Snow Guards Attached With Adhesive

All of the short aluminum angle and clear plastic snow guards attached with butyl-based peal-and-stick adhesive failed during the first winter. As is shown in Figure 11, most of the failures occurred between the adhesive and the coating on the metal roof, but some failures occurred cohesively in the butyl-based adhesive.

We carefully installed all these snow guards ourselves according to instructions provided by the manufacturer. We believe we used more care than can be expected on a routine (non-research) job. We have discussed this with the manufacturer of these snow guards, and he indicates that thousands of them are in place on roofs without the problems we experienced. We, however, have decided to put our faith in other adhesive attachment methods.

Our work at Fort Drum with electrical heaters on roofs has convinced us that "neutral curing" room temperature vulcanizing (RTV) silicone adhesive can do well on metal roofs. Thus, in November of 1993 we used this material to attach eight clear plastic snow guards in a row (two per pan) along the eaves of a roof away from any valley or parapet wall. They survived the 1994-95 winter without damage but seven of the eight failed during the 1995-96 winter.

In October of 1994 we also installed an array of 22 clear plastic snow guards attached with "neutral curing" silicone in a valley. The following spring one had failed at the silicone/coated metal interface. We noticed that

the silicone on that snow guard was quite thick. That may explain why it alone failed. We replaced it with another similar snow guard attached with the same material, albeit as a thinner layer. All 22 came off during the winter of 1995-96. Most failed at the plastic/silicone interface.

In October of 1994 we installed eight clear plastic snow guards in a row (as above) on another roof, but this time we used the normal silicone construction sealant available at Fort Drum, not the special "neutral curing" variety mentioned above. We did this with the expectation that in a year or so this "acid curing" silicone would weaken its grip on the coated metal and these snow guards would fail. As stated previously, the following winter did not create heavy snow loads so a meaningful test was not provided. All of these guards failed during the winter of 1995-96. Most failures were at the plastic/silicone interface. The metal roof was rusting around these snow guards.

Conclusions and Recommendations

Design loads on snow guards should be based on the assumption that friction along the metal roof is zero and no dynamic loads occur. Multiple rows of snow guards spaced well apart up the roof are better at preventing damaging snow slides (i.e., dynamic loads) than is one row of last-resort snow guards placed near the eaves. Usually, the bottom row of snow guards should not be placed out on the cold eaves, since such guards could aid in the formation of ice dams there.

Owing to a variety of "real world" issues, we feel that the design load on a snow guard should be less than half of any failure load reported by a manufacturer. The approximate doubling of load on the end snow guard or snow guard fastener for a guard system that does not extend to the end of a roof should also be considered in design.

By holding snow on a roof, snow guards may increase icing problems at eaves. The most effective method to prevent ice damming at cold eaves is to configure roofs as cold, ventilated systems.

Self-tapping screws, self-drilling screws and stainless steel structural blind rivets were able to secure aluminum angle snow guards to the flat top of the standing seams present at Fort Drum. The tops of most standing seams are of a different configuration, so other attachment methods are usually required. Clamps that employ set screws are commonly used. Of the three mechanical attachment methods we used, we are most comfortable with structural blind rivets even though several of them pulled out. We were at the lower end of the "grip range" of the rivets used. Had slightly shorter rivets been available, they might have mushroomed somewhat more, giving them improved pull-out resistance. Mechanical attachment of snow guards through the pan of a metal roof into purlins below is seldom a viable alternative.

We did not use the plastic adhesive used commercially to attach most snow guards because it must be installed at or above 50° F and maintained that warm for 28 days. The adhesives we used were somewhat less

About The Authors

Wayne Tobiasson

James Buska

Alan Greatorex

Wayne Tobiasson *is a Research Civil Engineer with the U.S. Army Corps of Engineers' Cold Regions Research and Engineering Laboratory (CRREL) in Hanover, NH. His work is aimed at improving the performance of buildings in cold regions with studies on snow loads and the adverse effects of moisture on roofing systems. He has a B.S. in Civil Engineering from Northeastern University and a Masters of Engineering from Dartmouth College. He is a member of the American Society of Civil Engineers (ASCE), has been a member of the faculty of the Roofing Industry Educational Institute (RIEI), and is an honorary member of RCI.*

James Buska *is a Research Civil Engineer with CRREL. He has been conducting applied research on cold regions roofing technology for the last 11 of his 19 years with CRREL. Buska has B.S. and M.S. Degrees in Civil Engineering from Montana State University. He is a member of ASCE.*

Alan Greatorex *is a Civil Engineering Technician with CRREL. He has worked on building technology for the past 23 years, with much of that focusing on moisture in roofs and slow load design criteria. He has an associate degree in Architecture and Building Technology from Vermont Technical College.*

reliable than mechanical attachment. We had some success with neutral-curing, room temperature vulcanizing (RTV) silicone adhesives. Snow guards attached with conventional "hardware store" silicone adhesive were not able to take heavy loads, and that acetic-acid-liberating adhesive can cause rusting of the metal roof. We recommend against use of butyl-based peal-and-stick adhesives.

Improved design guidelines, standards and performance criteria are needed for snow guards on metal (and other) roofs.

Acknowledgments

The Department of Public Works at Fort Drum and the Office of the Chief of Engineers provided the funds needed for this study. Gary Dahl of the Department of Public Works at Fort Drum made many valuable observations. Bill Marcum of Martech Associates Inc. kindly shared information he has collected on snow guards.

References

American Society of Civil Engineers (1995) "Minimum Design Loads for Buildings and Other Structures," *ASCE Manual*, 7-95, Washington, DC.

Katakawa, K., C. Shimomura, H. Ishikawa, S. Hatae, H. Matsuda (1992) "Characteristics of Snow Pressure Acting on Avalanche-Preventive Fences," in Proceedings, Second International Conference on Snow Engineering, *Cold Regions Research and Engineering Laboratory Special Report*, 92-27, Hanover, NH.

Paine, J. (1989) "Building Design for Heavy Snow Areas," in Proceedings, First International Conference on Snow Engineering, *Cold Regions Research and Engineering Laboratory Special Report*, 89-6, Hanover, NH.

Taylor, D. (1993) "Danger: Falling Snow," "Construction Practice" article, *Institute for Research in Construction*, Ottawa, Canada.

Tobiasson, W. and J. Buska (1993) "Standing Seam Metal Roofing Systems in Cold Regions," in *Proceedings of the 10th Conference on Roofing Technology*, National Roofing Contractors Association, Rosemont, IL

Tobiasson, W., J. Buska and A. Greatorex (1994) "Ventilating Attics to Minimize Icings at Eaves," in *Energy and Buildings*, Vol. 21, Elsevier, pp 229-234.

January 1997 · Vol. XV, No. 1

RCI Interface

In This Issue

4 · President's Message
6 · Water Dams: Up North it's Ice; Down South it's Pine Needles
9 · Snow Loads on Roofs
12 · Snow Guards for Metal Roofs
20 · 1996 Guide to *Interface* Indexed by Topic
22 · RCI 12th International Convention & Trade Show
23 · Convention Speakers
25 · The RRC: The Apex of Roofing
28 · Worth Another Look
30 · Industry News
32 · Educational Update
35 · Regional News
39 · Executive Notes
40 · RCI Board Meets in Chicago
41 · How to Get on the Board of RCI
42 · Member News
43 · RICOWI Decides Not to Mobilize on Fran
44 · Facilities Manager Column
45 · Passing on the Family Business: Asking the Right Questions
47 · Classifieds
48 · Calendar of Events

RCI was chartered, in part, to bridge the gap between the seemingly disparate elements of the roofing profession. It is the intent of *Interface* to connect with these elements, educate and inform about roofing-related topics, establish a common ground for discussion, promote Institute programs, and branch out toward even more people. *Interface* is circulated monthly to over 3,000 people (nationwide and overseas) including RCI members, specifiers, facility managers, owners, industry contacts, and a growing number of highly placed professionals. *Interface* is frequently distributed at various trade shows, as well as educational and institutional functions.

Disclaimer: The articles contained in this publication have been prepared for and are intended to provide information that *may* be useful to members of the Roof Consultants Institute. RCI does not necessarily endorse this information. The reader must evaluate the information in light of the unique circumstances of any particular situation and independently determine its applicability. Entire contents, © RCI.

On The Cover: *The roof collapse in the top photo followed a particularly heavy snow in the areas of Georgia, North Carolina, Tennessee, Virginia, and Pennsylvania in March 1993. The second half of the roof, to the left, collapsed after this photo was taken. Bottom, snow load collapse losses in pre-engineered buildings are often more costly because of the extent of building damage and, consequently, damage to the contents. Photos ©1996 Factory Mutual Engineering Corp. Reprinted with permission. For more on snow loads, see Bill Marcum's article, page 9.*

ADVERTISER INDEX

ADVERTISER	PHONE NUMBER	PAGE
Allied Signal, Inc.	(800) 221-6490	11
Butler Roof Systems	(800) 998-ROOF	27
Carlisle SynTec Systems	(800) 4-SYNTEC, Ext. 7148	1
EMSL Analytical	(800) 220-3675	26
Firestone Building Products	(800) 428-4442	Inside Back Cover
GAF Materials Corporation	(800) 688-6654	34
HPG	(800) 457-6634	19
Infrared Inspections, Inc.	(800) 543-2279	48
Insta-Foam Products	(800) 800-3626	5
JPS Elastomerics Corp.	(800) 621-ROOF	24
Jeffrey Knapp	(908) 647-6472	26
Jim D. Koontz & Assoc.	(800) 645-7663	26
Merik Inc.	(770) 993-8087	33
North American Roofing Systems	(800) 678-4248	Inside Front Cover
Siplast	(800) 922-8800	2
Soprema Roofing & Waterproofing	(800) 356-3521	Outside Back Cover
Robert Stanford & Assoc.	(713) 261-8522	26
Topcoat	(800) 323-0009, Ext. 528	41
U-Flow Roof Drain Systems	(716) 854-1521	8